CITY OF MILTON

a community since 1838

AGENDA
City of Milton
Parks & Recreation Commission
Monday, February 17, 2020
6:00 p.m.
PUBLIC WORKS DEPARTMENT
Conference Room
150 Northside Drive

1. **Call To Order**

2. **Approve Agenda**

3. **Approval Of Minutes - November 18, 2019**

   Documents:

   PARKS AND RECREATION COMMISSION MINUTES 11-18-19.PDF

4. **2020 Work Plan**

   Documents:

   2020 PARKS AND RECREATION COMMISSION WORK PLAN.PDF

   a. ***Update, Discussion, And Possible Action On Veterans Park Pavilion***

      Documents:

      VETERANS PARK PAVILION SCHEDULE.PDF

   b. ***Update, Discussion, And Possible Action On Story Gardens Project***

   c. ***Discussion And Possible Action On Installation Of Two Bike Repair Stations***

      Documents:

      FIXIT BIKE REPAIR STATION.PDF
      TOOL KIT BIKE REPAIR.PDF
      AIR KIT 2.PDF
      AIR KIT 3.PDF
      PUMP STOP.PDF

5. **General Items**

6. **Set Next Meeting Date**

7. **Motion To Adjourn**

**Please note that upon reasonable notice, at least 48 hours in advance, efforts will be made to

accommodate the needs to disabled individuals through appropriate aids and services. For additional information to request this service, please contact the City Clerk's office at 868-6900, 710 S. Janesville Street, Milton, WI 53563.

Notice is hereby given that a majority of the Common Council may be present at this meeting at the above mentioned date and time to gather information about a subject over which they have decision-making responsibility. This constitutes a meeting of the City Council pursuant to State ex rel. Badke v. Greendale Village Bd., 173 Wis. 2d 553, 494 N.W. 2d 408 (1993) and must be noticed as such, although the City Council will not take any formal action at this meeting.

Posted by: Leanne Schroeder, February 14, 2020

City of Milton
Parks & Recreation Commission
November 18, 2019

Call To Order
Chairperson Ryan Peterson called the November 18, 2019 meeting of the Parks & Recreation Commission to order at 6:17 p.m.

Present: Chairperson Ryan Peterson, David Snow, James Bostwick, Lee Ann Hare, and Karen Reed.

Also Present: Dick Fry, Mike Fredrick, Director of Public Works Howard Robinson, and Administrative Services Director Inga Cushman.

Approve Agenda
Comm. Bostwick motioned to approve the agenda. Comm. Hare seconded, and the motion carried.

Approval Of Minutes - September 16, 2019
Comm. Bostwick motioned to approve the minutes. Comm. Reed seconded, and the motion carried.

Update, Discussion, And Possible Action On The Veterans Park Pavilion
D. Fry and M. Fredrick provided an update on the fundraising and construction of the pavilion.

2019 Work Plan

a. **Update On Story Gardens Project**
   Director Cushman provided an update on the Story Gardens project.

Discussion And Possible Action On Permanent Installation Of Story Walk Book Holders Around The Trail At Crossridge Park
The commission discussed this project idea from library staff. The commission requested answers the following questions:

1. How often will the stories be changed out?
2. Who will be responsible for changing the stories?

The commission postponed this item until the next meeting.

Discussion And Possible Action On Operations At The Air Products Ice Rink
The commission discussed operations at the ice rink. Director Cushman will post a "call for volunteers" in mid-December to see if individuals or organizations are interested in opening the warming house on a volunteer basis.

Discussion And Possible Action On 2020 Work Plan
Comm. Reed motioned to approve the 2020 Work Plan with the installation of the disc golf baskets at King Park and installation of the playground equipment at Water Tower Park added to 2020 projects. Comm. Hare seconded, and the motion carried.

General Items
Director Robinson and Director Cushman provided an update on capital items currently in the draft 2020 budget related to the parks.

Set Next Meeting Date
The next meeting of the Parks & Recreation Commission will take place on January 13, 2020 at 6 p.m.

Motion To Adjourn
Comm. Snow motioned to adjourn the November 18, 2019 meeting of the Parks & Recreation Commission at 7:23 p.m. Comm. Reed seconded, and the motion carried.

Respectfully Submitted,

Inga Cushman
Administrative Services Director

City of Milton
Parks & Recreation Commission
2020 Work Plan

MISSION

The Parks and Recreation Commission oversees development of new, and maintenance of existing, indoor and outdoor recreational facilities owned by the City of Milton. The commission strives to provide quality recreation opportunities at city parks and facilities that serve people of all ages and abilities.

2019 PROJECT REVIEW

- Crossridge Park
  - Hosted the Annual Prairie Seed Collection – October 19, 2019

- Tree City USA Designation
  - Recommended approval of the Arbor Day Proclamation to the Common Council – March 18, 2019
  - Hosted an Arbor Day Observance event
  - Completed the application for Tree City USA Designation
  - Recommended approval to the Common Council of a resolution authorizing the submittal of an Urban Forestry Grant from the Wisconsin Department of Natural Resources.
  - Received a 2019 Urban Forestry Grant from the Wisconsin Department of Natural Resources.
  - Continued current tree replacement program in parks.

- Milton Area Veterans Memorial
  - Placed additional bricks at the memorial
  - Assisted with the 2nd Annual Active Duty Military Honor Holiday Tree
  - Worked with volunteers on fundraising, planning, and construction of a pavilion at Veterans Park.

- Bike Racks
  - Purchased two bike racks – One at North Goodrich Park and one at South Goodrich Park. Installation will occur in the fall of 2019 or spring of 2020, depending on weather and staff schedules.

- King Park
  - Determined the locations for two new baskets that will be added in the fall of 2019 or spring of 2020, depending on weather and staff schedules.

- Tails n Trails Dog Park
  - Hosted Annual Clean Up on September 14, 2019.

- Tower Hill Park Improvements
  - Added a path to the playground equipment from the sidewalk for accessibility.

- Water Tower Park

- Purchased additional playground equipment and installation will take place in the fall of 2019 or spring of 2020, depending on the weather and staff schedules.

2020 PARKS & RECREATION COMMISSION PLANNED PROJECTS AND ACTIVITIES

- Bike Racks
  - Select locations, purchase, and install two new bike racks for City of Milton parks.

- Community House Rejuvenation
  - Develop a plan of action to rejuvenate the Community House interior and exterior.

- King Park
  - Install two additional baskets in specified locations if not completed in fall of 2019.

- Lamar Park
  - Blacktop under bleachers at the "little" ball diamond.

- Liberty Park Updates – Play and Traffic
  - Select, purchase, and install additional playground equipment to enhance play opportunities at the park.
  - Analyze options to create a safer traffic pattern in and out of the park.

- Milton Area Veterans Memorial / Veterans Park
  - Continue Annual Active Duty Military Honor Holiday Tree.
  - Place bricks at the memorial prior to Memorial Day, 4th of July, and Veterans Day.
  - Host the dedication of the Veterans Park Pavilion on Memorial Day, May 25, 2020.
  - Determine the locations in the park and plant a mix of evergreens and shade trees.

- Milton Public Library Outdoor Space – Story Gardens
  - Continue work on the design, fundraising, and construction.
  - Construct a gazebo, raised garden beds, and ramp if funding is in place.

- Pollinator Art
  - Work with the schools and/or local artists on creating art pieces that showcase pollinators for Crossridge Park and/or Story Gardens at the Milton Public Library.

- Tails n Trails Dog Park
  - Host Annual Clean Up – April 25, 2020
  - Determine new location for the port-a-john away from the entrance and blacktop a spot for it to maintain a level surface.
  - Add a curb around the dog washing station to better direct the water flow away from the parking lot.

- Trail connecting Crossridge Park to Schilberg Park
  - Continue discussions on this project as shown in the Comprehensive Plan as development in the area continues.

- Water Tower Park
  - Install purchased playground equipment if not completed in fall of 2019.

- General park maintenance as documented in previous park surveys.

- Review the lights at the ball diamonds and make repairs as needed.

- Create a video catalog of the parks with assistance from an Eagle Scout or high school students, if possible.

- Tree City USA Designation
    - Recommend approval of the Arbor Day Proclamation to the Common Council
    - Host an Arbor Day Observance event – April 25, 2020
    - Complete application for Tree City USA Designation
    - Recommend approval to the Common Council of a resolution authorizing the submittal of a 2021 Urban Forestry Grant from the Wisconsin Department of Natural Resources.
    - Continue current tree replacement program in parks.

MILTON PARKS & RECREATION COMMISSION MEMBERS

Ryan Peterson, Chairperson	Ald. Jerry Elsen
James Bostwick	Andrea Christianson
Lee Ann Hare	Karen Reed
Annette Smith	David Snow
Ty Knudsen, Milton High School Representative	Howard Robinson, Director of Public Works (Ex-Officio)

WINTER/SPRING SCHEDULE

FEBRUARY 15 & 16

Prep patio for re-start of construction

FEBRUARY 17 – 28

Set beams

Install roof

Hang exterior wall curtain

MARCH 2 -18

Construction of ceilings

Hang doors

Install drop curtain

MARCH 19

Trades begin. Painters, electricians, plumbers, security, cabinets, appliances, bathroom partitions, stainless shelf, etc

APRIL 6

Remove exterior curtain wall

APRIL 7

Trim the roof line

APRIL 13 – MAY 8

Begin landscaping and plant trees

MAY 8 & 9

Spring clean up with volunteers

MAY 25

Dedication and Gifting to City of Milton

FIXIT

Today's Service Station

The Fixit includes all the tools necessary to perform basic bike repairs and maintenance, from changing a flat to adjusting brakes and derailleurs. The tools are securely attached to the stand with stainless steel cables and tamper-proof fasteners. Hanging the bike from the hanger arms allows the pedals and wheels to spin freely while making adjustments.

Patents D680,914 S1 and US 9,498,880 B2

DERO
A PLAYCORE Company

© 2019 Dero

FIXIT

Hanger arms accommodate most types of bikes

QR code takes smart phone users to comprehensive bike repair web site

Large surface area for sponsorship, branding, or way-finding signage

Tools are secured with braided stainless steel aircraft cables

Includes most commonly used tools for simple bike maintenance

Screwdrivers and Allen Wrenches are on swivel connectors for easier use

Tools included:
Philips and flat head screwdrivers
2.5, 3, 4, 5, 6, 8mm Allen wrenches
Headset wrench
Pedal wrench
8, 9, 10, 11mm box wrenches
Tire levers (2)

Add your choice of an Air Kit bike pump (sold separately) to keep your cyclists' tires topped up and ready to roll. The Air Kits feature our new Metal Head™, a sturdy cast aluminum pump head with Presta and Schrader valve compatibility.

These public bike repair products require occasional maintenance and replacing of parts to remain serviceable.

FINISH OPTIONS

Galvanized

Stainless

Powder Coat

White	Black	Light Gray RAL 7042	Deep Red RAL 3003	Yellow RAL 1023
CNH Bright Yellow	Orange RAL 2004	Beige RAL 1001	Iron Gray 7011	Hunter Green RAL 6005
Light Green RAL 6018	Green RAL 6016	Sepia Brown RAL 8014	Bronze	Silver 9007
Dark Purple	Flat Black	Wine Red RAL 3005		

www.dero.com | 1-888-337-6729

DERO A PLAYCORE Company

© 2019 Dero

FIXIT

Submittal Sheet

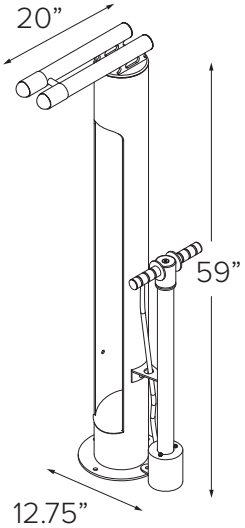

Fixit with Air Kit 2

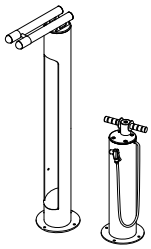

Fixit with Air Kit 3

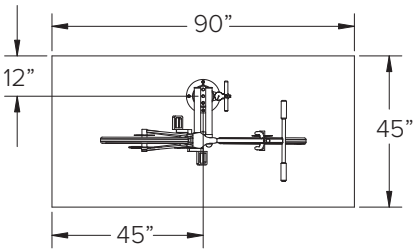

Minimum Footprint

CAPACITY 1 Bike

MATERIALS

Main body: 6”x .154” tube
Bike Hanger: 1.5” sch. 40 pipe, ¼” plate
Foot: 10” dia. x .25” plate
Tool tethers: 5/32” stainless steel cable
Manual air pump
Hand tools:
- Philips and flat head screwdrivers
- 2.5, 3, 4, 5, 6, 8mm Allen wrenches
- Headset wrench
- Pedal wrench
- 8, 9, 10, 11mm box wrenches
- Tire levers (2)

FINISHES

☐ **Galvanized**
An after fabrication hot dipped galvanized finish is our standard option.

☐ **Powder Coat**
Our powder coat finish assures a high level of adhesion and durability by following these steps:
1. Sandblast
2. Epoxy primer electrostatically applied
3. Final thick TGIC polyester powder coat

☐ **Thermoplastic**
In addition to an increased thickness (8-10mils), the thermoplastic finish covers a galvanized layer and offers superior impact resistance over powder coating.

☐ **Stainless**
Stainless Steel: 304 grade stainless steel material finished in either a high polished shine or a satin finish.

MOUNT OPTIONS

☐ **Surface**
Has 10” diameter x.25” foot with four anchors per foot.

© 2019 Dero

FIXIT

Setbacks

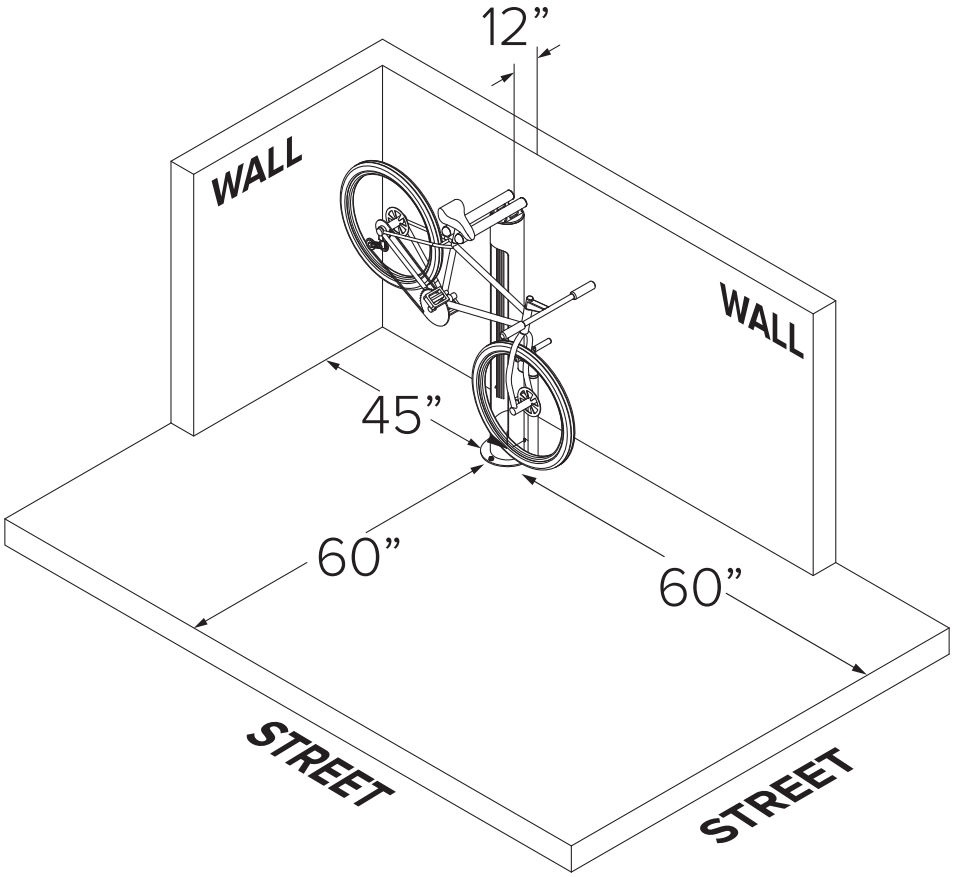

An optional wheel catch is available to hold bikes with no kick stands

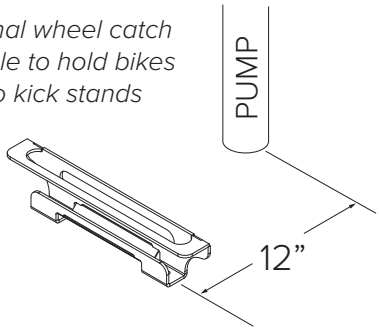

© 2019 Dero

FIXIT

Installation Instructions

TOOLS NEEDED

Hammer drill
3/8” masonry bit
Hammer
Socket Wrench
9/16” socket
1/2” socket
Tamper-proof socket (included)*
Socket extension, 6” min.

RECOMMENDED BASE MATERIAL

Solid concrete is the best base material for installation. To ensure the proper anchors are shipped with your rack, ask your Dero Rack representative which anchor is appropriate for your application. Be sure nothing is underneath the base material that could be damaged by drilling.

Be sure to save your tamper-resistant tools for any future maintenance. They are costly to replace.

1

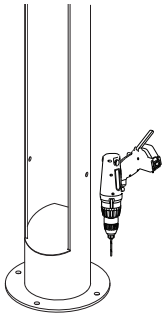

Reference the Fixit setback recommendations and place the upright in the desired location. Use the base as a template and drill (4) 3/8” x 3” holes in the concrete with a hammer drill and masonry bit. Clean up all concrete dust from drilling.

2

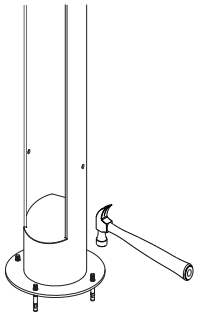

Hammer in the (4) wedge anchors. Leave at least 3/4” of an inch of exposed threads above the Fixit base.

3

Ⓣ = Tamper-proof Nuts
Ⓢ = Standard Nuts

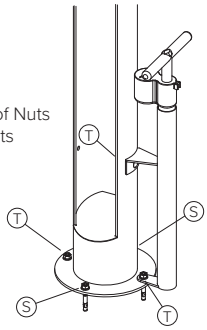

Decide which position the pump will be installed in and place the bottom pump flange over the corresponding wedge anchor. Attach the top pump flange to the Fixit upright with a carriage bolt, washer, and tamper-proof nut. Tighten all wedge anchors with washers and nuts.
Reserve one of the tamper-proof nuts to secure the tools.

4

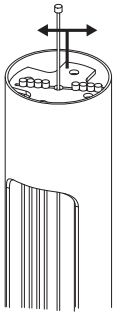

Insert the tool cables into the cable slot on the Fixit upright.

© 2019 Dero

FIXIT

Installation Instructions

5

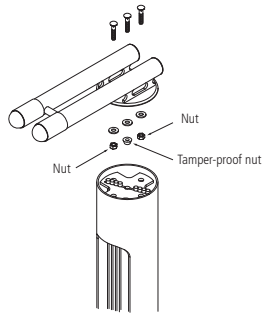

Place the bike hanger in the desired position on top of the Fixit upright and attach with carriage bolts, washers and nuts. **Apply the tamper-proof nut to center bolt to secure tools.**

If you would like us to add your station to our online map, email the station's geocoordinates to web@dero.com. These coordinates can be obtained by simply clicking a point on a Google Map.

http://www.dero.com/fixitmap/fixitmap.html

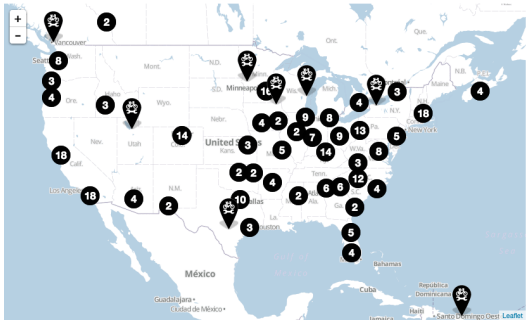

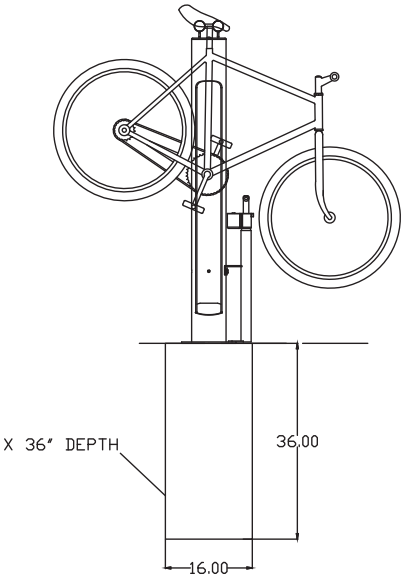

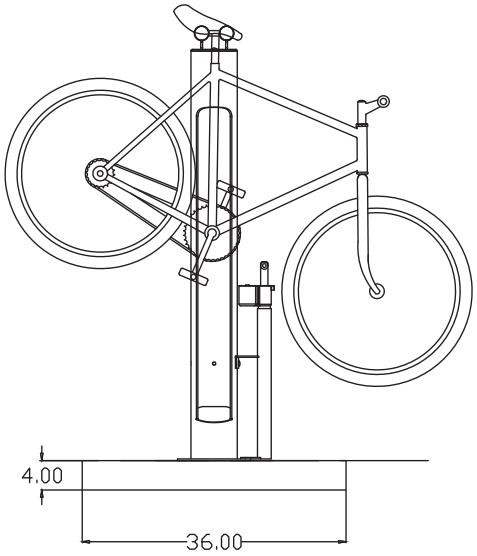

PAD 36" X 36" X 4"

Pad recommendations for pouring along trail

© 2019 Dero

FIXIT

Maintenance and Replacement

NOTE:

All threads for all parts of the pump are right-hand threads. They tighten clockwise, and loosen counter-clockwise (“righty tighty, lefty loosey”). However, when you are looking top-town at a bolt that threads from underneath, if you move it counter-clockwise from your point of view, you are actually tightening, not loosening, the nut! This has led to some unnecessary breakage of pump parts. Be sure you are looking at the nut with the proper orientation before tightening or loosening.

REMOVING THE AIR KIT FROM THE FIXIT

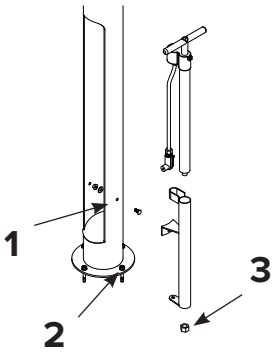

1. Remove nut and bolt on side of Fixit.

2. Remove tamperproof nut on bottom of Fixit, using the Tamperproof Penta Tool supplied for this purpose.

3. Once Airpump is removed, but still in sleeve, remove the 1 3/16” nut on the bottom of the sleeve (turning counter-clockwise). You can now slide the pump out.

CHANGING THE PUMPHEAD

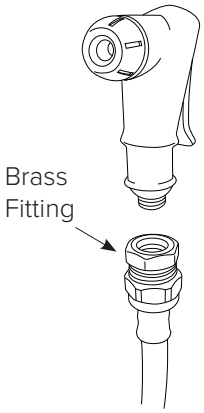

Remove the shrinkwrap. Unscrew the pumphead from the brass fitting (turning counter-clockwise). You will need to keep the brass fitting for the new pumphead. Replace the pumphead. If you want to put on shrinkwrap, then put the shrinkwrap sleeve over the hose before replacing pumphead. Once pumphead is on, pull shrinkwrap sleeve over the brass fitting and use a heatgun to shrink it.

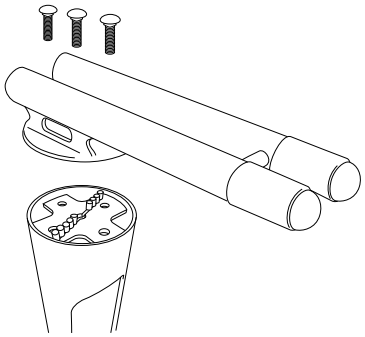

REPLACING TOOLS

There are three bolts at the top of the Fixit. Underneath are two 3/8” nuts, and one penta tamper-proof nut (center bolt). These are all best removed with a socket wrench, using the extension tool to enable you to reach the nuts. Once the nuts are removed, take off the cap to replace tools.

© 2019 Dero

TOOL KIT

Public Bike Repair

The Dero Tool Kit includes all the necessary tools to perform most routine maintenance and adjustments on most bikes. All the tools are securely fastened with stainless steel cables and tamper-proof fasteners. Two versions are available, a floor mount and a wall mounted version.

Patents: D717,214 – 9,095,973B2 – 9,505,124B2

DERO
A PLAYCORE Company

© 2018 Dero

TOOL KIT

TOOLS INCLUDED:
Philips and flat head screwdrivers 2.5, 3, 4, 5, 6, 8mm Allen wrenches
Headset wrench
Pedal wrench
8, 9, 10, 11mm box wrenches Tire levers (2)

FINISH OPTIONS

Galvanized

Stainless

Powder Coat

White	Black	Light Gray RAL 7042	Deep Red RAL 3003	Yellow RAL 1023
CNH Bright Yellow	Orange RAL 2004	Blue RAL 5005	Sky Blue RAL 5015	Hunter Green RAL 6005
Light Green RAL 6018	Green RAL 6016	Sepia Brown RAL 8014	Bronze	Silver 9007
Dark Purple	Flat Black	Wine Red RAL 3005	Beige RAL 1001	Iron Gray 7011

www.dero.com | 1-888-337-6729

DERO
A PLAYCORE Company

© 2018 Dero

TOOL KIT

Submittal Sheet

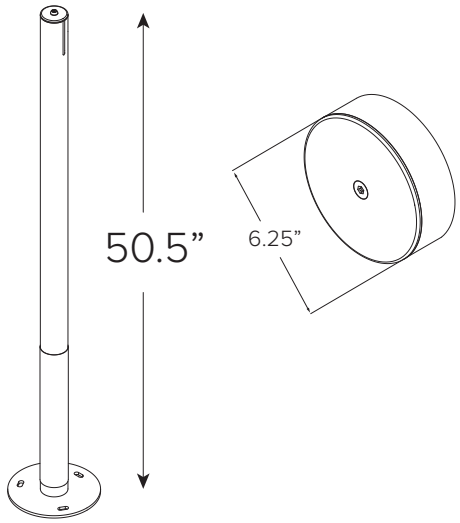

Tools Included:

1. *Philips and flat head screwdrivers*
2. *2.5, 3, 4, 5, 6, 8mm Allen wrenches*
3. *Headset wrench*
4. *Pedal wrench*
5. *8, 9, 10, 11mm box wrenches*
6. *Tire levers*

MATERIALS

Surface-Mounted Tool Kit

A. Main body: 2” sch. 40 pipe
B. Top cap: 3/16” plate
C. Foot: 8” dia. x .25” plate
D. Tool tethers: 5/32” stainless steel cable

Wall-Mounted Tool Kit

A. Main body: 6.308 x .154” tube, 3/16” plate
B. Top cap: 3/16” plate
C. Tool tethers: 5/32” stainless steel cable

FINISHES

☐ **Galvanized**
An after fabrication hot dipped galvanized finish is our standard option.

☐ **Powder Coat**
Our powder coat finish assures a high level of adhesion and durability by following these steps:
1. Sandblast
2. Epoxy primer electrostatically applied
3. Final thick TGIC polyester powder coat

☐ **Stainless**
Stainless Steel: 304 grade stainless steel material finished in either a high polished shine or a satin finish.

MOUNT OPTIONS

☐ **Wall Mount** has a 6” dia. x 3/16” base plate that is installed onto a wall with 2 anchors.

☐ **Surface** has 8”x.25” circular foot with three anchors.

© 2018 Dero

TOOL KIT
Setbacks

Surface Mount:
Wall Setback: The Tool Kit should be at least 12” from a wall. Both sides of the Tool Kit should be 36” from either wall.

No part of the Tool Kit should protrude onto a walkway, bike lane, or common area.

Street Setback: The Tool Kit should be at least 60” from the street.

Wall Mount:
Wall Setback: The Tool Kit should be mounted on a wall at least 54” from the ground to the center of the Tool Kit. The Tool Kit should be 36” from an adjacent wall.

© 2018 Dero

TOOL KIT

Installation Instructions – Surface Mount

TOOLS NEEDED

Tape Measure
Marker or Pencil
Masonry Drill Bit
Drill (Hammer drill recommended)
Hammer
Wrench 9/16”
Level

RECOMMENDED BASE MATERIAL

Solid concrete is the best base material for installation. To ensure the proper anchors are shipped with your Tool Kit, ask your Dero Tool Kit representative which anchor is appropriate for your application. Be sure nothing is underneath the base material that could be damaged by drilling.

1

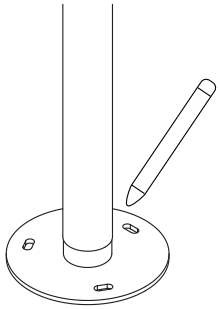

Place the Tool Kit in the desired location. Use a marker or pencil to outline the holes of the flange onto the base material.

2

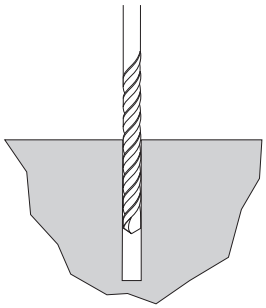

Drill 3/8” diameter holes 3” deep into surface. Make sure the holes are at least 3” away from any cracks in the base material.

3

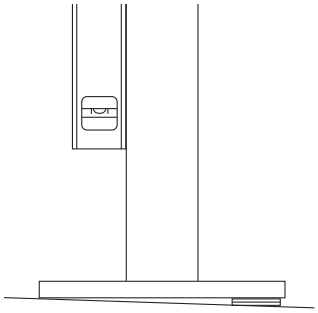

Place Tool Kit (and washers to level rack if necessary) over holes.

4

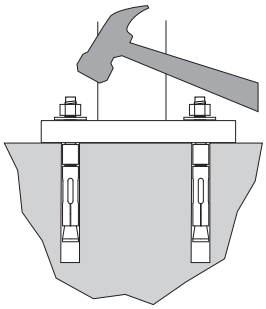

Thread nuts onto anchors, leaving approximately 1/4” of the anchor protruding, and tap into surface. Tighten nuts down to secure the stand.

© 2018 Dero

TOOL KIT

Installation Instructions – Wall Mount

1

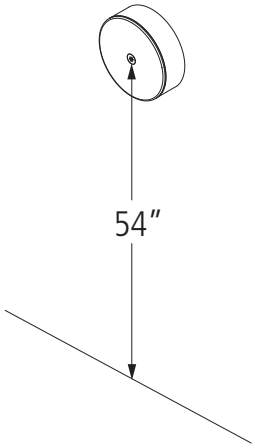

The Tool Kit wall-mount should be installed with the center of the Tool Kit 54” above the ground.

2

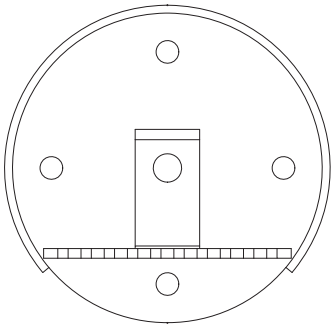

There are 4 mounting holes; only 2 need to be used. For installations into a vertical stud, use the 2 vertically oriented holes. The horizontally oriented holes can be used for other types of installation. 3/8” wedge anchors, lag bolts, or other fasteners may be used.

3

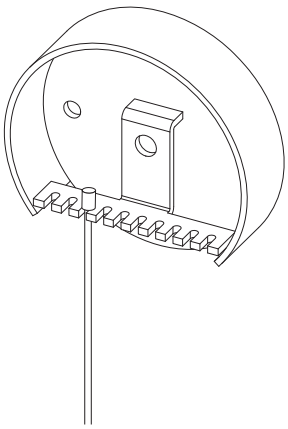

Once the base is installed, place the tool cables in the slots, and fasten the cap with the provided 3/8” tamper-resistant bolt.

© 2018 Dero

AIR KIT 2

A Bike Pump for Everyone

The Air Kit 2 is a Dero-designed and fabricated bike pump made for public use and built to withstand weather year-round. Made in Minnesota (where we know a thing or two about weather), the Air Kit 2 is built from tough, Schedule 40 steel, and is serviceable down to the plunger and gaskets. It also features our new Metal Head™, a sturdy cast aluminum pump head with Presta and Schrader valve compatibility. The pump hose is made of steel-reinforced hydraulic hose for added durability, and replacement pump heads and gaskets are available on our website.

Patent US9,765,766 B2

© 2018 Dero

AIR KIT 2

Durable hand grips

Aluminum pump head accepts schrader and presta valves

Reinforced air hose

Gasket rating -30° to 110° F

Supplement your Air Kit with our Pump Stop, a convenient accessory that holds bikes upright while filling your tires.

FINISH OPTIONS

Galvanized

Stainless

Powder Coat

White	Black	Light Gray RAL 7042	Deep Red RAL 3003	Yellow RAL 1023
CNH Bright Yellow	Orange RAL 2004	Beige RAL 1001	Iron Gray 7011	Hunter Green RAL 6005
Light Green RAL 6018	Green RAL 6016	Sepia Brown RAL 8014	Bronze	Silver 9007
Dark Purple	Flat Black	Wine Red RAL 3005		

© 2018 Dero

AIR KIT 2
Submittal Sheet

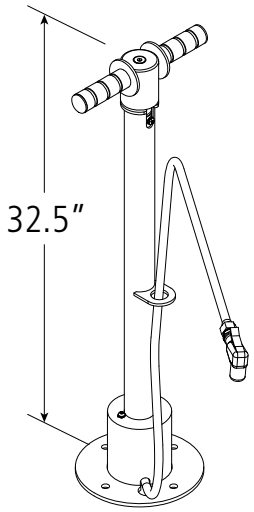

Surface Mount

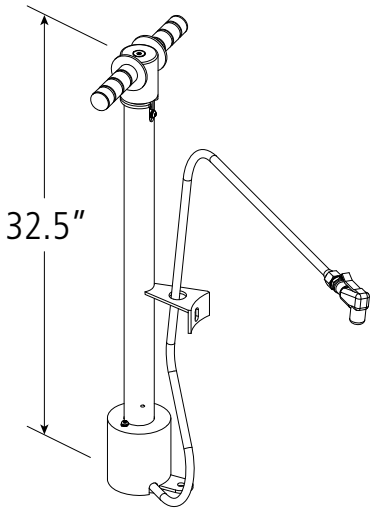

Fixit Mount

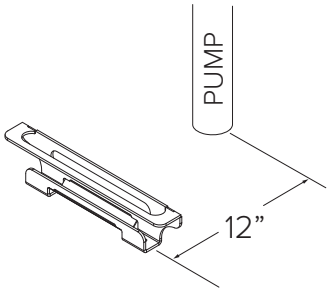

An optional wheel catch is also available to hold bikes with no kick stands

MATERIALS

Main Body: 1.5” schedule 40 pipe
Manual air pump: Dero made
Foot: ¼” steel

FINISHES

☐ **Galvanized**
An after fabrication hot dipped galvanized finish is our standard option. 250 TGIC powder coat colors, thermoplastic coating, PVC dip, and stainless steel finishes are also available as alternate options.

☐ **Powder Coat**
Our powder coat finish assures a high level of adhesion and durability by following these steps:
1. Sandblast
2. Epoxy primer electrostatically applied
3. Final thick TGIC polyester powder coat

☐ **Stainless**

Stainless Steel: 304 grade stainless steel material finished in either a high polished shine or a satin finish.

MOUNT OPTIONS

☐ **Surface**
Surface Mount has 10” diameter x .25” flange with four anchoring holes for mounting with standard wedge anchors.

☐ **Fixit**
Air Kit 2 mounts to side of Fixit bike repair station

DERO
A PLAYCORE Company

© 2018 Dero

AIR KIT 2

Setbacks

The Air Kit 2 should be installed 36” from any obstruction.

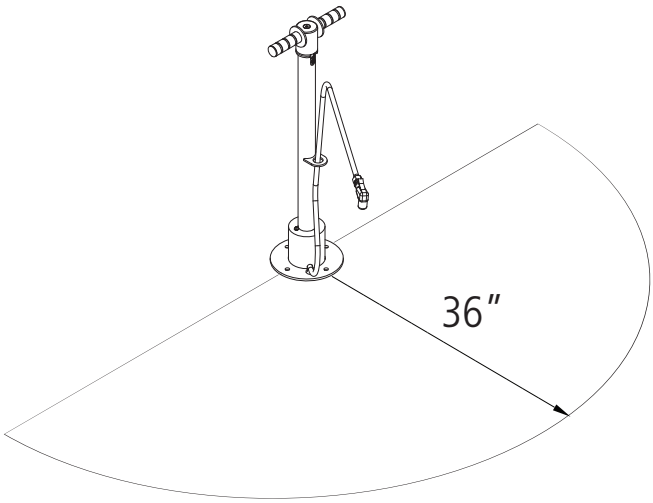

DERO
A PLAYCORE Company

© 2018 Dero

AIR KIT 2

Installation Instructions – Surface Mount

TOOLS NEEDED

Marker or Pencil
Masonry Drill Bit 3/8”
Drill (Hammer drill recommended)
Hammer
Wrench 9/16”
Level

RECOMMENDED BASE MATERIAL

Solid concrete is the best base material for installation. To ensure the proper anchors are shipped with your Air Kit, ask your Dero representative which anchor is appropriate for your application. Be sure nothing is underneath the base material that could be damaged by drilling.

Be sure to save your tamper-resistant tools for any future maintenance. They are costly to replace.

1

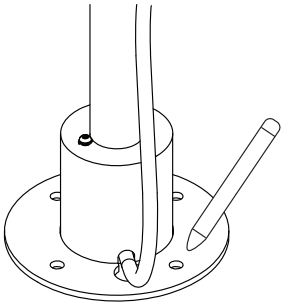

Place the Air Kit 2 in the desired location. Use a marker or pencil to outline the holes of the flange onto the base material.

2

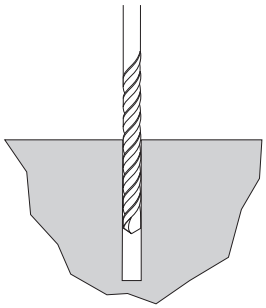

Drill the holes in accordance with the specifications shipped with the anchors. Make sure the holes are at least 3” away from any cracks in the base material.

3

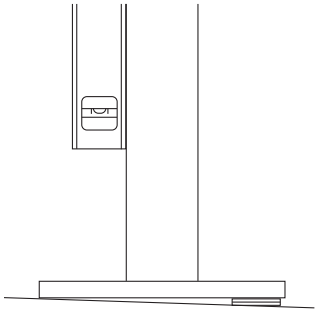

Use washers to level pump if necessary.

4

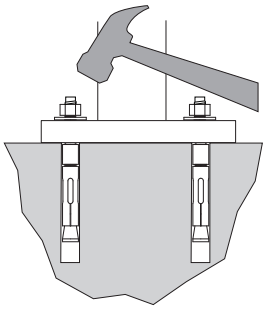

Thread nuts onto anchors, leaving approximately 1/4” of the anchor protruding, and tap into surface. **Place the 2 provided tamper-proof penta nuts on opposite sides.** Tighten nuts down to secure pump.

© 2018 Dero

AIR KIT 2

Installation Instructions – Fixit Mount

1

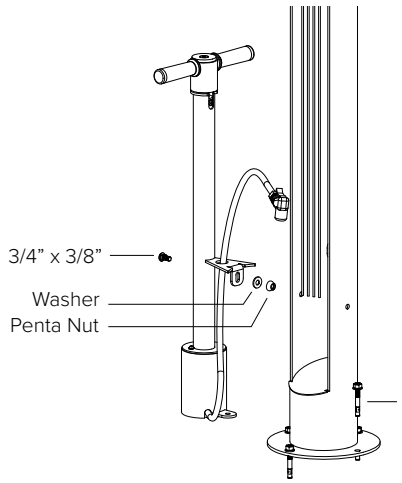

Attach the top pump flange to the Fixit upright with a carriage bolt, washer, and tamper-proof nut. Tighten all wedge anchors with washers and nuts.

© 2018 Dero

AIR KIT 2

Maintenance and Repair Instructions

Note: All threads for all parts of the pump are right-hand threads. They tighten clockwise, and loosen counter-clockwise ("righty tighty, lefty loosey"). However, when you are looking top-town at a bolt that threads from underneath, if you move it counter-clockwise from your point of view, you are actually tightening, not loosening, the nut! This has led to some unnecessary breakage of pump parts. Be sure you are looking at the nut with the proper orientation before tightening or loosening.

AIR KIT 2 MAINTENANCE

1 Remove tamper-resistant screws, lock washer and spacer.

2 Plunger assembly may now be pulled out. To replace gaskets, pry old o-rings off and clean piston. Apply new silicone grease and install new gaskets. Apply more silicone grease to new o-rings. Re-assemble and wipe off excess grease when done.

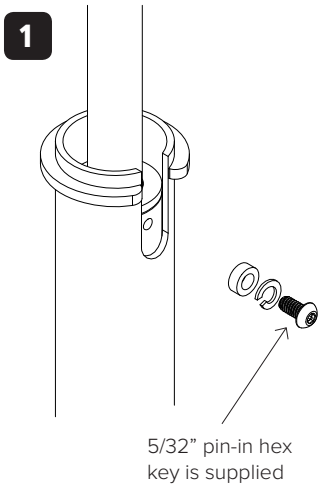

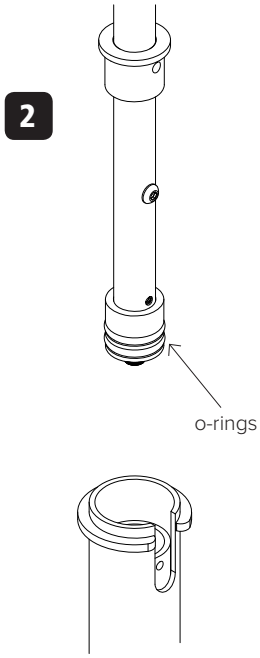

CHANGING PLASTIC PUMP HEAD

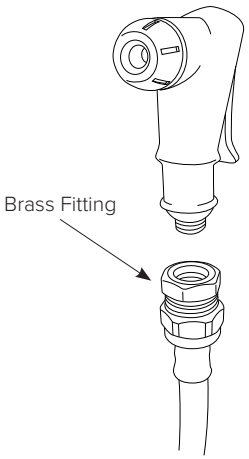

Remove the red heat-shrink covering the base of the pump head. Unscrew the pumphead from the brass fitting (turning counter-clockwise). You will need to keep the brass fitting for the new pump head. Replace the pump head.

If you will be replacing the heat-shrink, then put the heat-shrink sleeve over the hose before replacing pump head. Once pump head is on, pull heat-shrink sleeve over the brass fitting and use a heatgun to shrink it.

CHANGING METAL HEAD™

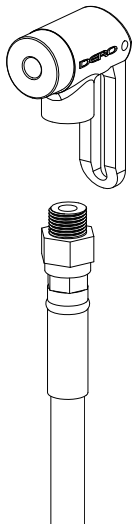

Remove Metal Head™ by turning counter-clockwise. You will need a 3/4" wrench. Replace with new Metal Head and tighten.

If you are replacing a plastic pump head with a Metal Head, you will need to also purchase a replacement hose.

© 2018 Dero

AIR KIT 3

Public Pump with Tire Gauge

The Air Kit 3 is built for outdoor public use. This robust bike pump features our new Metal Head™, a sturdy cast aluminum pump head with Presta and Schrader valve compatibility. The Air Kit's waterproof PSI gauge is also helpful when filling up your bike tires. The pump hose is made of steel-reinforced hydraulic hose for added durability, and replacement pump head and gaskets are available on our website.

Patent US9,765,766 B2

DERO
A PLAYCORE Company

© 2018 Dero

AIR KIT 3

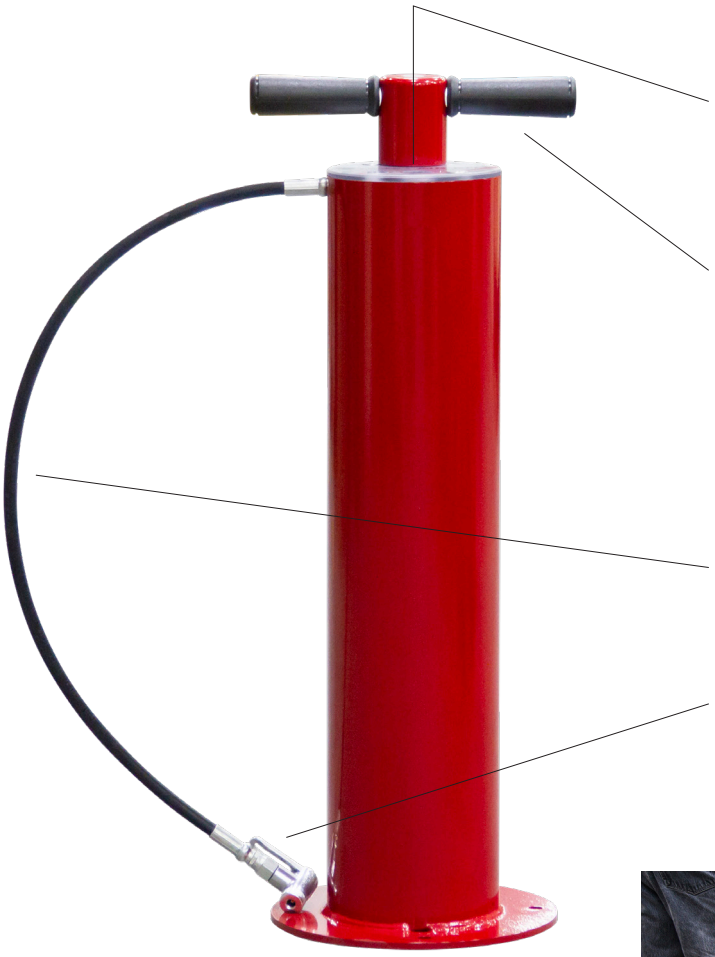

Air Kits require occasional maintenance and replacing of parts to remain serviceable.

Supplement your Air Kit with our Pump Stop, a convenient accessory that holds bikes upright while filling your tires.

FINISH OPTIONS

Galvanized

Stainless

Powder Coat

White	Black	Light Gray RAL 7042	Deep Red RAL 3003	Yellow RAL 1023
CNH Bright Yellow	Orange RAL 2004	Beige RAL 1001	Iron Gray 7011	Hunter Green RAL 6005
Light Green RAL 6018	Green RAL 6016	Sepia Brown RAL 8014	Bronze	Silver 9007
Dark Purple	Flat Black	Wine Red RAL 3005		

www.dero.com | 1-888-337-6729

DERO A PLAYCORE Company

© 2018 Dero

AIR KIT 3
Submittal Sheet

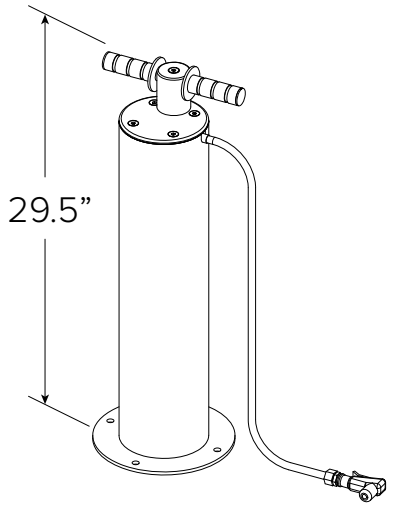

Surface Mount

MATERIALS

Main Body: 6” tube
Top: 1/4” polycarbonate
Manual air pump: Dero made, max 160psi
Foot: ¼” steel

FINISHES

☐ **Galvanized**
An after fabrication hot dipped galvanized finish is our standard option.

☐ **Powder Coat**
Our powder coat finish assures a high level of adhesion and durability by following these steps:
1. Sandblast
2. Epoxy primer electrostatically applied
3. Final thick TGIC polyester powder coat

MOUNT OPTIONS

☐ **Surface**
Surface Mount has 10” diameter x .25” flange with four anchoring holes for mounting with standard wedge anchors.

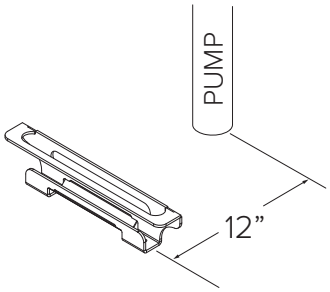

An optional Pump Stop is also available to hold bikes with no kick stands

DERO
A PLAYCORE Company

© 2018 Dero

AIR KIT 3

Setbacks

The Air Kit 3 should be installed at least 36” away from any obstructions.

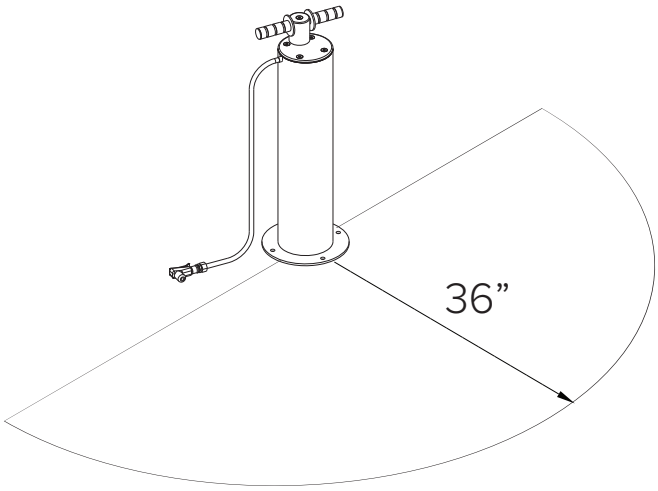

DERO
A PLAYCORE Company

© 2018 Dero

AIR KIT 3

Installation Instructions – Surface Mount

TOOLS NEEDED

Marker or Pencil
Masonry Drill Bit 3/8”
Drill (Hammer drill recommended)
Hammer
Wrench 9/16”
Level

RECOMMENDED BASE MATERIAL

Solid concrete is the best base material for installation. To ensure the proper anchors are shipped with your Air Kit, ask your Dero representative which anchor is appropriate for your application. Be sure nothing is underneath the base material that could be damaged by drilling.

Be sure to save your tamper-resistant tools for any future maintenance. They are costly to replace.

1

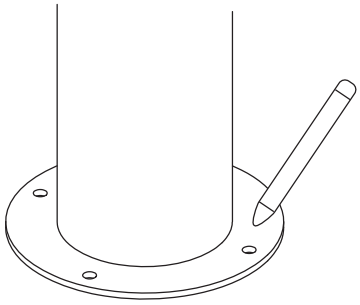

Place the Air Kit 3 in the desired location. Use a marker or pencil to outline the holes of the flange onto the base material.

2

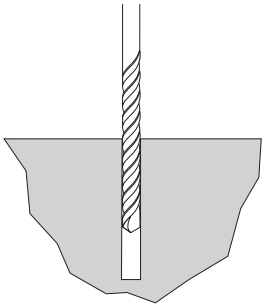

Drill 3/8” diameter holes 3” deep into surface. Make sure the holes are at least 3” away from any cracks in the base material.

3

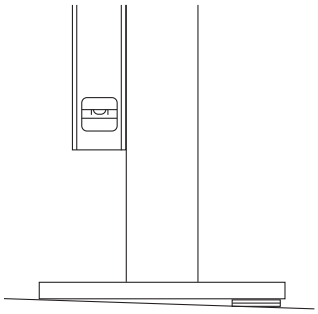

Use washers to level pump if necessary.

4

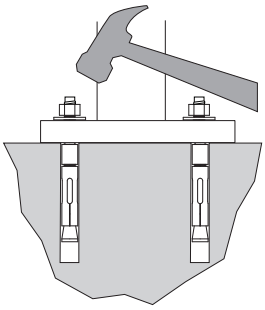

Thread nuts onto anchors, leaving approximately 1/4” of the anchor protruding, and tap into surface. **Place the 2 provided tamper-proof penta nuts on opposite sides.** Tighten nuts down to secure pump.

© 2018 Dero

AIR KIT 3

Maintenance and Repair Instructions

Note: All threads for all parts of the pump are right-hand threads. They tighten clockwise, and loosen counter-clockwise ("righty tighty, lefty loosey"). However, when you are looking top-town at a bolt that threads from underneath, if you move it counter-clockwise from your point of view, you are actually tightening, not loosening, the nut! This has led to some unnecessary breakage of pump parts. Be sure you are looking at the nut with the proper orientation before tightening or loosening.

AIR KIT 3 MAINTENANCE

1. Remove tamper-resistant screws and lift polycarbonate top and metal gauge plate.
2. Remove thumb-screw, lock washer and spacer
3. Plunger assembly may now be pulled out. To replace gaskets, pry old gaskets off and clean piston. Apply new silicone grease and install new gaskets. Apply more silicone grease to new gaskets. Re-assemble and wipe off excess grease when done.

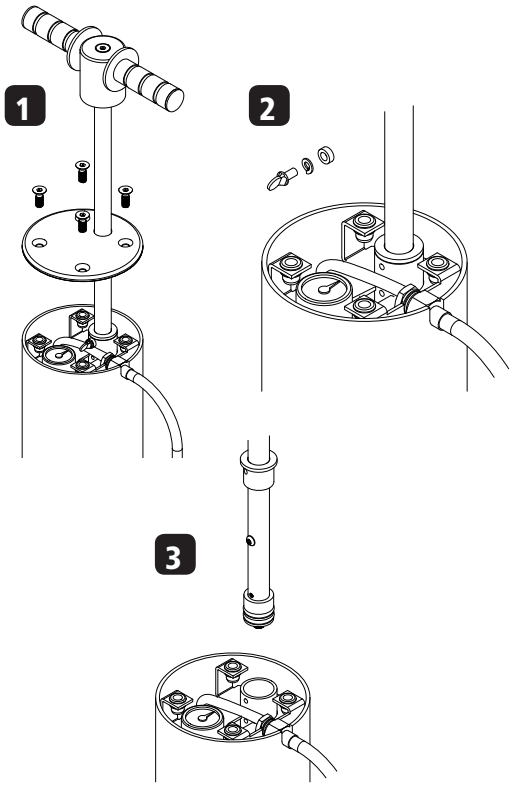

CHANGING PLASTIC PUMP HEAD

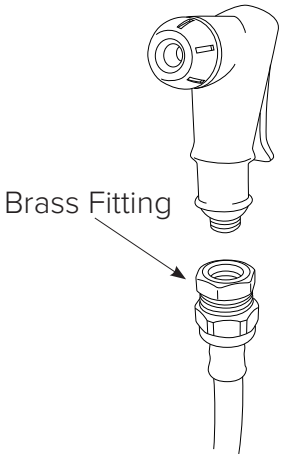

Remove the red heat-shrink covering the base of the pump head. Unscrew the pump head from the brass fitting (turning counter-clockwise). You will need to keep the brass fitting for the new pumphead. Replace the pump head.

If you will be replacing the heat-shrink, then put the heat-shrink sleeve over the hose before replacing pumphead. Once pump head is on, pull heat-shrink sleeve over the brass fitting and use a heatgun to shrink it.

CHANGING METAL HEAD™

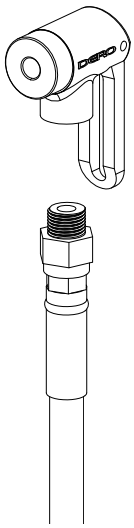

Remove Metal Head™ by turning counter-clockwise. You will need a 3/4" wrench. Replace with new Metal Head and tighten.

If you are replacing a plastic pump head with a Metal Head, you will need to also purchase a replacement hose.

© 2018 Dero

PUMP STOP

Stand By Your Pump

The Pump Stop holds bikes upright while filling tires with air. It is the perfect accessory to any Dero public air pump.

DERO
A PLAYCORE Company

© 2017 Dero

PUMP STOP

FINISH OPTIONS

Galvanized

Powder Coat

White	Black	Light Gray RAL 7042	Deep Red RAL 3003	Yellow RAL 1023
CNH Bright Yellow	Orange RAL 2004	Blue RAL 5005	Sky Blue RAL 5015	Hunter Green RAL 6005
Light Green RAL 6018	Green RAL 6016	Sepia Brown RAL 8014	Bronze	Silver 9007
Dark Purple	Flat Black	Wine Red RAL 3005	Beige RAL 1001	Iron Gray 7011

www.dero.com | 1-888-337-6729

DERO
A PLAYCORE Company

© 2017 Dero

PUMP STOP

Submittal Sheet

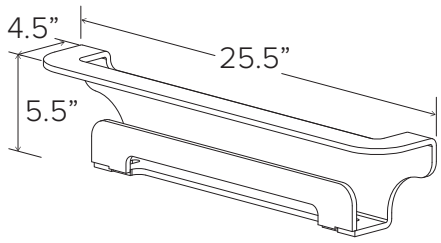

CAPACITY 1 Bike

MATERIALS 5/16” Steel Plate

FINISHES

☐ **Powder Coat**
Our powder coat finish assures a high level of adhesion and durability by following these steps:
1. Sandblast
2. Epoxy primer electrostatically applied
3. Final thick TGIC polyester powder coat

MOUNT OPTIONS

☐ **Surface**
Mounts to install surface with two anchors

© 2017 Dero

PUMP STOP

Setbacks

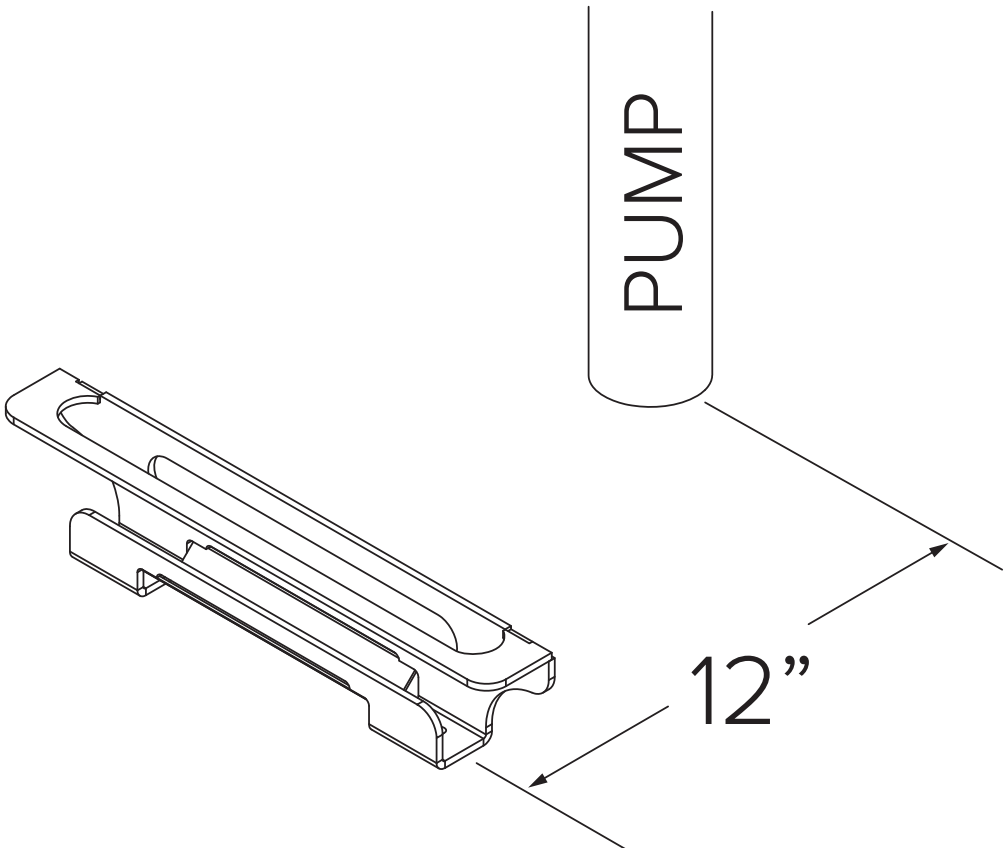

© 2017 Dero

PUMP STOP

Installation Instructions – Surface Mount

TOOLS NEEDED

Tape Measure
Marker or Pencil
Masonry Drill Bit
Drill (Hammer drill recommended)
Hammer
Wrench 9/16”
Level

RECOMMENDED BASE MATERIAL

Solid concrete is the best base material for installation. To ensure the proper anchors are shipped with your rack, ask your Dero Rack representative which anchor is appropriate for your application. Be sure nothing is underneath the base material that could be damaged by drilling.

1

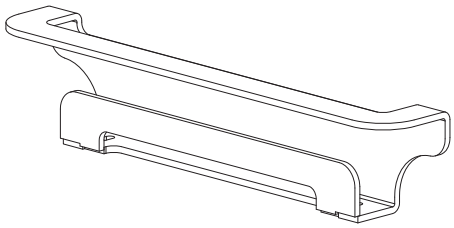

Place the rack in the desired location. Use a marker or pencil to outline the holes of the flange onto the base material.

2

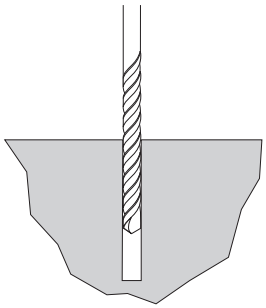

Drill 3/8” diameter holes 3” deep into surface. Make sure the holes are at least 3” away from any cracks in the base material.

3

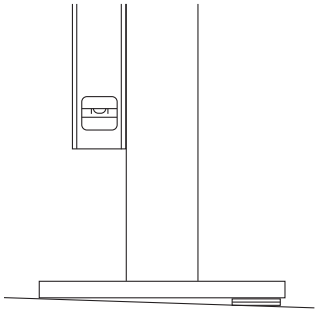

Place rack (and washers to level rack if necessary) over holes.

4

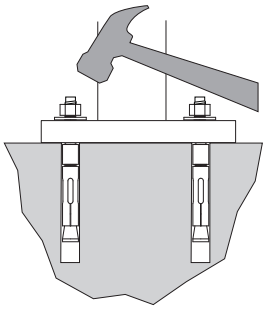

Thread nuts onto anchors, leaving approximately 1/4” of the anchor protruding, and tap into surface. Tighten nuts down to secure rack.

© 2017 Dero