CITY OF MILTON

a community since 1838

AGENDA
City of Milton
Virtual Plan Commission
Tuesday, June 2, 2020
4:00 pm

**PLEASE NOTE: In-person attendance by members of the public temporarily prohibited due to COVID-19 physical distancing protocols pursuant to the Rock County Health Departments Reopening Phased Plan, dated May 21, 2020, which discourages public gatherings. Members of the public may monitor this meeting at https://us02web.zoom.us/j/82471850371**

**Any person who is unable to access the meeting via the internet link may call 1(312) 626-6799 and enter Meeting ID: 824 7185 0371 to monitor the meeting via telephone.**

1. **Call to Order**

2. **Approval of Agenda**

3. **Approval of Plan Commission Meeting Minutes - May 5, 2020**

   Documents:

   Plan Commission Minutes 05-05-2020.pdf

4. **Public Hearing, Discussion and Possible Action Regarding Ordinance #474 Amending Section 78-1233 of the Code of Ordinances Concerning Mini Warehouse Off-Street Parking Requirements**

   Documents:

   Memo - Ordinance 474 - Mini Storage Unit Parking Requirements.pdf
   Ordinance 474 - An Ordinance Amending Section 78-1233 Concerning Miniwarehouse Off-Street Parking Requirements.pdf
   Notice of Public Hearing - Ordinance 474.pdf

5. **Discussion and Possible Action Regarding Site Plan Approval for Mini Warehouse on Arthur Drive.**

   Documents:

   Memo - Arthur Drive Storage Units.pdf
   Arthur Drive Mini Warehouse Plans.pdf
   Arthur Drive Mini Warehouse Stormwater Plan.pdf

6. **Discussion and Possible Action Regarding a Site Plan for 310 Sunnyside Drive**

Documents:

Memo - 310 Sunnyside Storage Units.pdf
310 Sunnyside Building Plans.pdf
310 Sunnyside Lighting Plan.pdf
310 Sunnyside Lighting Specs.pdf
310 Sunnyside Site Diagrams.pdf
310 Sunnyside Site Plan 5-27-2020.pdf
310 Sunnyside Stormwater Plan.pdf

7. **General Items**

8. **Next Meeting ~ June 16, 2020**

9. **Motion to Adjourn**

**Please note that upon reasonable notice, at least 48 hours in advance, efforts will be made to accommodate the needs to disabled individuals through appropriate aids and services. For additional information to request this service, please contact the City Clerk's office at 868-6900, 710 S. Janesville Street, Milton, WI 53563.

Posted by Leanne Schroeder May 29, 2020 at Dave's Ace Hardware, Piggly Wiggly, Milton City Hall.

**Notice is hereby given that a majority of the Common Council may be present at this meeting at the above mentioned date and time to gather information about a subject over which they have decision-making responsibility. This constitutes a meeting of the City Council pursuant to State ex rel. Badke v. Greendale Village Bd., 173 Wis. 2d 553, 494 N.W. 2d 408 (1993) and must be noticed as such, although the City Council will not take any formal action at this meeting.

# City of Milton
# Plan Commission
# May 5, 2020

**Call to Order**
Mayor Anissa Welch called the May 5, 2020 meeting of the Plan Commission to order at 4:01 p.m.

Present: Mayor Anissa Welch, Ald. Larry Laehn, Public Works Director Howard Robinson, Dave Ostrowski, Frank Green, Bob Seales, and Ethel Himmel.

Also Present: City Administrator Al Hulick and Administrative Services Director Inga Cushman.

**Approval of Agenda**
Comm. Ald. Laehn motioned to approve the agenda. Comm. Himmel seconded, and the motion carried.

**Approval of Plan Commission Meeting Minutes - March 3, 2020**
Comm. Himmel motioned to approve the minutes. Comm. Seales seconded, and the motion carried.

**Discussion and Possible Action Regarding Site Plan Approval for SRB Properties at 209 Parkview Drive.**
Comm. Ostrowski motioned to approve the site plan for SRB Properties at 209 Parkview Drive. Comm. Himmel seconded, and the motion carried.

**Discussion and Possible Action Regarding a Two-Lot Extraterritorial Certified Survey Map along North Milton Road in the Town of Milton**
Comm. Ostrowski motioned to approve the proposed two-lot certified survey map along North Milton Road in the Town of Milton. Comm. Himmel seconded, and the motion carried.

**Discussion and Possible Action Regarding Site Plan Approval for a Sign Replacement at Kwik Trip Located at 603 West Madison Avenue.**
Comm. Himmel motioned to approve the site plan for the sign changes at Kwik Trip, 603 W. Madison Avenue. Comm. Green seconded, and the motion carried with Comm. Ostrowski abstaining.

**General Items**
Administrator Hulick provided an overview of items for future agendas.

**Next Meeting ~ May 19, 2020**
The next meeting of the Plan Commission will take place on May 19, 2020 at 4 p.m.

**Motion to Adjourn**
Comm. Green motioned to adjourn the May 5, 2020 meeting of the Plan Commission at 4:14 p.m. Comm. Ostrowski seconded, and the motion carried.

Respectfully Submitted,

Inga Cushman
Administrative Services Director

CITY OF MILTON

a community since 1838

# Office of the City Administrator

**To:** Mayor Welch, Milton Plan Commission
**From:** Al Hulick, City Administrator
**Date:** June 2, 2020
**Subject:** Public Hearing, Discussion and Possible Action Regarding Ordinance #474 Amending Section 78-1233 of the Code of Ordinances Concerning Mini Warehouse Off-Street Parking Requirements

---

**Summary**

Over the past several months, the City of Milton has received several proposals for "Mini-Storage Units" to be developed within the City. Each one of these proposals has been stalled or withdrawn because of the City's off-street parking requirement for this type of development. As currently written, Section 78-1233 of the Code of Ordinances for the City of Milton requires one parking stall per storage unit. In discussions with the various developers as well as researching common development practices with other communities, the City Administration agrees that the current parking requirement is not in line with current development practices. Therefore, Ordinance #474 amends the parking requirements for mini storage unit development to effectively remove the one stall per unit requirement. The Ordinance still requires one stall per 10 units. This requirement is much more in line with current development practices.

**Analysis**

The Milton Plan Commission will hold a public hearing regarding the Ordinance change at their June 2, 2020 meeting. Additionally, the ZBA reviewed and approved a proposal regarding a variance request to further decreased the parking requirement to 1 per 20 units at their May 28, 2020 meeting.

**Recommendation**

The City Administration recommends following the public hearing, the Milton Plan Commission forward a favorable recommendation to the Common Council regarding Ordinance #474.

**ORDINANCE NUMBER #2020-474**
**AN ORDINANCE AMENDING SECTION 78-1233 OF THE CODE OF ORDINANCES OF THE CITY OF MILTON CONCERNING MINIWAREHOUSE OFF-STREET PARKING REQUIREMENTS**

WHEREAS, Section 78-1233 of the Code of Ordinances of the City of Milton currently requires 1 space per 10 storage units, plus spaces in front of units as the minimum off-street parking requirements for miniwarehouses; and

WHEREAS, the significant minimum off-street parking requirements for miniwarehouses is currently preventing a number of proposed miniwarehouse developments from occurring on the basis that the parking requirements remove such a significant amount of available space for the development of miniwarehouses so as to make such developments uneconomical; and

WHEREAS, the Plan Commission of the City of Milton having held a duly noticed public hearing on the proposed amendment to section 78-1233 of the Code of Ordinances of the City of Milton to reduce the off-street parking requirements for miniwarehouses to 1 space per 10 storage units; and

WHEREAS, following said public hearing the plan commission having determined that the proposed amendment to Section 78-1233 of the Code of Ordinances of the City of Milton is appropriate, is consistent with existing miniwarehouses in the city, and having voted to recommend to the common council that said section be so amended; and

WHEREAS, the Common Council of the City of Milton having determined that it is appropriate to adopt the recommendation of the plan commission concerning the minimum required off-street parking requirements for miniwarehouses.

NOW, THEREFORE, the Common Council of the City of Milton do ordain as follows:

Section I. The off-street parking requirements table of Section 78-1233 pertaining to miniwarehouses is hereby amended to read as follows:

| | | |
|---|---|---|
| Miniwarehouses | | 1 space per 10 storage units |

Section II. This ordinance will take effect upon passage and publication as provided by law.

Approved by the Common Council of the City of Milton this _____ day of _____, 2020.

**CITY OF MILTON**

_____
Anissa Welch, Mayor

Attest:

_____
Leanne Schroeder, City Clerk

1st Reading: _____
2nd Reading: _____
3rd Reading: _____
Public Hearing: _____

Date Adopted: _____
Date Published: _____
Effective Date: _____

**Effect of Ordinance: Reduces the minimum number of off-street parking spaces required for mini-warehouses to 1 space per 10 storage units.**

CITY OF MILTON

a community since 1838

# NOTICE OF PUBLIC HEARING

The City of Milton Plan Commission will hold a **virtual** public hearing on **Tuesday, June 2, 2020 at 4:00 p.m.** via Zoom to consider proposed Ordinance #474, An Ordinance Amending Section 78-1233 of the Code of Ordinances of the City of Milton Concerning Miniwarehouse Off-Street Parking Requirements. The enactment of Ordinance #474 would reduce the minimum number of off-street parking spaces required for mini-warehouses to 1 space per 10 storage units.

A full and complete copy of the proposed ordinance is on file in the office of the Clerk for the City of Milton. All interested persons or their agents will be heard at said hearing after which a final determination will be made. This notice is given under Section 78 of the Municipal Code of Ordinances.

**Please Note: This Public Hearing will be conducted virtually via Zoom. Members of the public may participate via the internet link** https://us02web.zoom.us/j/82471850371 **or by calling 1-312-626-6799 and entering meeting ID: 824 7185 0371.**

Leanne Schroeder, City Clerk
Request received in office: 05/07/2020
Published in the Milton Courier: 05/14/2020 and 05/21/2020

Mayor, Anissa Welch
City Administrator, Al Hulick
City Attorney, Mark Schroeder
City Clerk, Leanne Schroeder
Director of Public Works, Howard Robinson
Police Chief, Scott Marquardt
City Assessor, Paul Musser

Common Council Members:
Ald Lynda Clark
Ald Devin Elliott
Ald Ryan Holbrook
Ald Larry Laehn
Ald Theresa Rusch
Ald Bill Wilson

Plan Commission Members:
Anissa Welch
Larry Laehn
Frank Green
Ethel Himmel
Dave Ostrowski
Bob Seales
Al Hulick
Howard Robinson

Individuals who are unable to attend the Public Hearing may submit comments to:
MAIL: Milton City Hall, 710 S. Janesville Street, Milton WI 53563
E-MAIL: lschroeder@milton-wi.gov or ahulick@milton-wi.gov
PHONE: 868-6900
FAX: 868-6927

CITY OF MILTON

a community since 1838

# Department of Public Works

**To:** Mayor Welch, Milton Plan Commission
**From:** Howard Robinson, Director of Public Works
**Date:** June 2, 2020
**Subject:** Discussion and Possible Action Regarding Site Plan Approval for Mini Warehouse on Arthur Drive.

---

**Summary**

B&J Storage has submitted a Site Plan to construct mini warehouses on Arthur Drive. The lot is vacant and is located across from American Awards and Promotions on the south side of Arthur Drive. The lot is zoned B-2. A Conditional use Permit is required for warehousing in B-2 zoned districts. Site Plan approval is required as part of the Conditional Use Permit. The proposed buildings are indicated on the attached site plan. A landscape plan is included and meets ordinance requirements. No outdoor trash containers are planned for this site. An exterior lighting plan is being submitted at a later date if the overall layout is approved. A stormwater plan is attached. Architectural drawings are required. No new signs are indicated on the plan. Off street parking is provided. Stalls for general parking are indicated. The stall location and number of stalls are indicated on the plan and match the proposed ordinance change requiring one stall per 10 units.

**Recommendation**

Approval of the site plan could be granted with the following contingencies:

1. Approval of the Conditional Use Permit.
2. Approval of DNR and City Engineer review of stormwater plan.
3. Submittal of a Lighting Plan that matches City Ordinances.
4. Submittal of Architectural Plans of the proposed buildings that show dimensions and materials.
5. Approval of the Parking Plan contingent on the approval of proposed Ordinance #474.
6. Applicable construction permits being obtained.

QUAM ENGINEERING, LLC 4604 Siggelkow Road, Suite A – McFarland, WI 53558 (608) 838-7750 \LS-04-19\LS04BASE.DWG

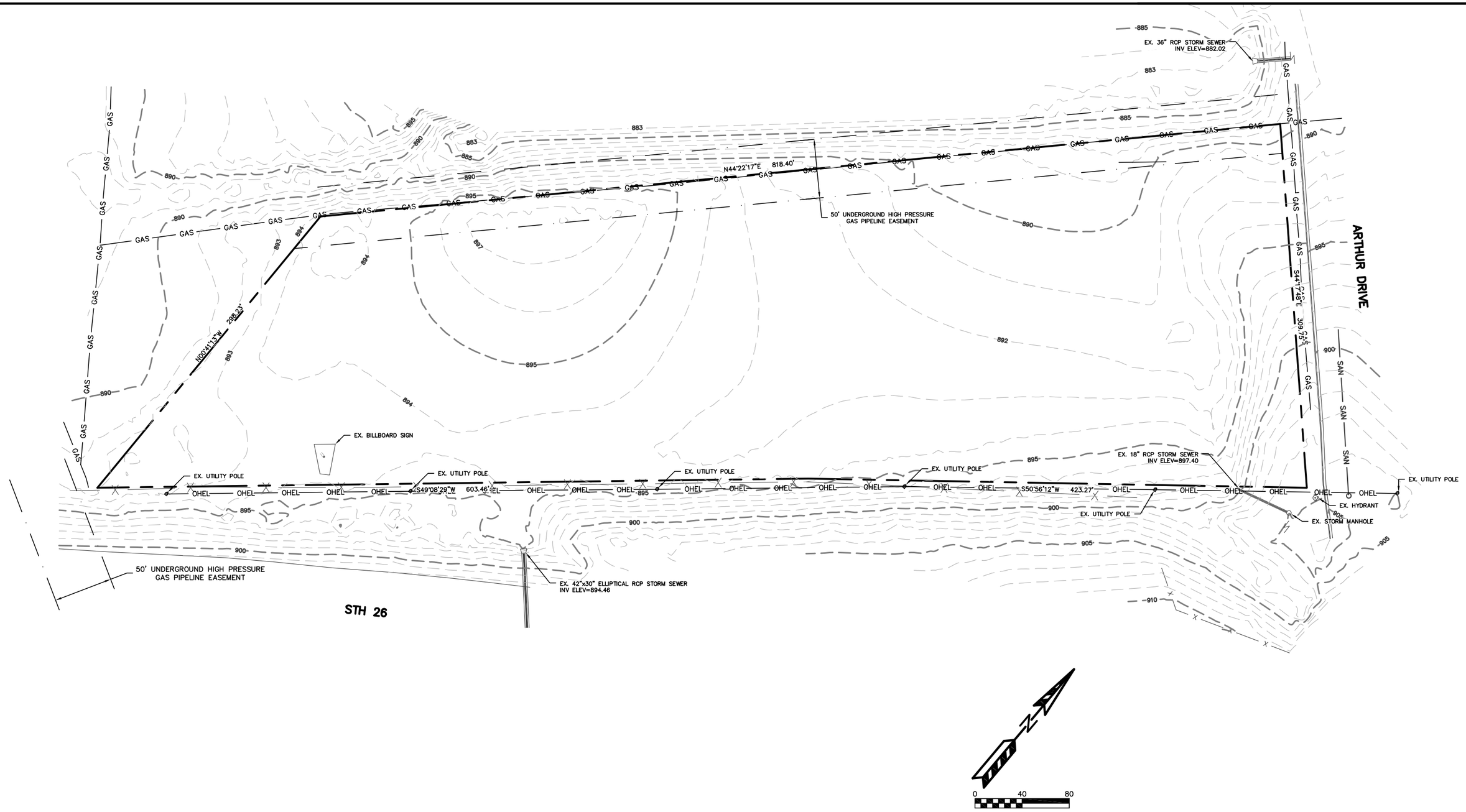


**ARTHUR DRIVE MINI-WAREHOUSES**
**– CITY OF MILTON**
EXISTING SITE PLAN

PAGE: 1 OF 5
DATED: MAY 27, 2020

QUAM ENGINEERING, LLC
Residential and Commercial Site Design Consultants
www.quamengineering.com
4604 Siggelkow Road, Suite A – McFarland, Wisconsin 53558
Phone (608) 838-7750; Fax (608) 838-7752

QUAM ENGINEERING, LLC 4604 Siggelkow Road, Suite A – McFarland, WI 53558 (608) 838-7750 \LS-04-19\LS04BASE.DWG

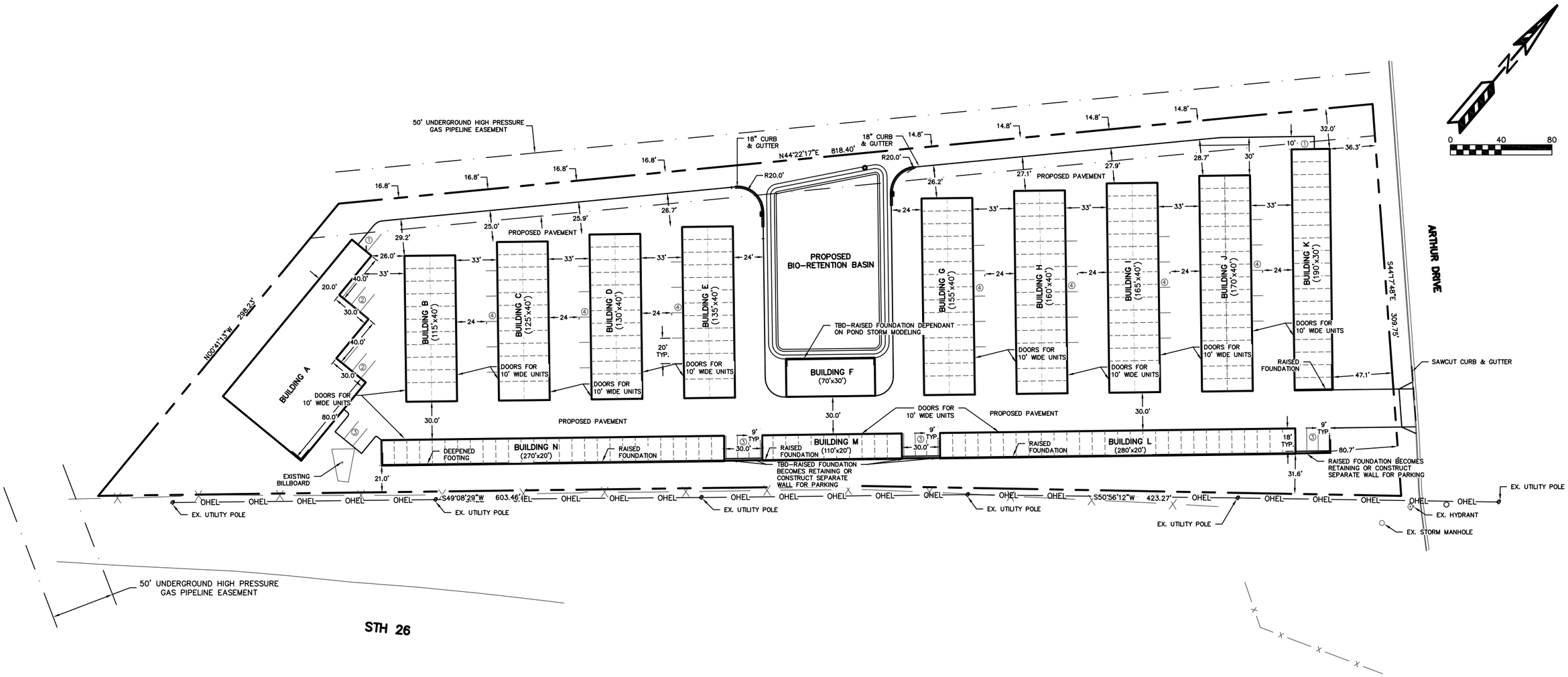


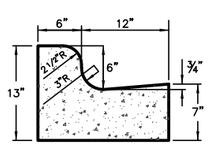


18" STANDARD CONCRETE CURB & GUTTER

MINI WAREHOUSE PARKING SUMMARY:

| | |
|---|---|
| ORDINANCE REQUIREMENT | 1 STALL PER 10 UNITS |
| PROPOSED MINI WAREHOUSE UNITS | 316 |
| REQUIRED PARKING STALLS | 32 |

CLIMATE CONTROL PARKING SUMMARY:

| | |
|---|---|
| REQUIRED STALLS PER ORDINANCE | TBD |
| PROPOSED CLIMATE CONTROL UNITS | TBD |

| | |
|---|---|
| TOTAL PROPOSED PARKING STALLS | 46 |

**ARTHUR DRIVE MINI-WAREHOUSES – CITY OF MILTON**

SITE PLAN WITH PARKING

PAGE: 2 OF 5

DATED: MAY 27, 2020

QUAM ENGINEERING, LLC
Residential and Commercial Site Design Consultants
www.quamengineering.com
4604 Siggelkow Road, Suite A – McFarland, Wisconsin 53558
Phone (608) 838-7750; Fax (608) 838-7752

QUAM ENGINEERING, LLC 4604 Siggelkow Road, Suite A – McFarland, WI 53558 (608) 838-7750 \LS-04-19\LS04BASE.DWG

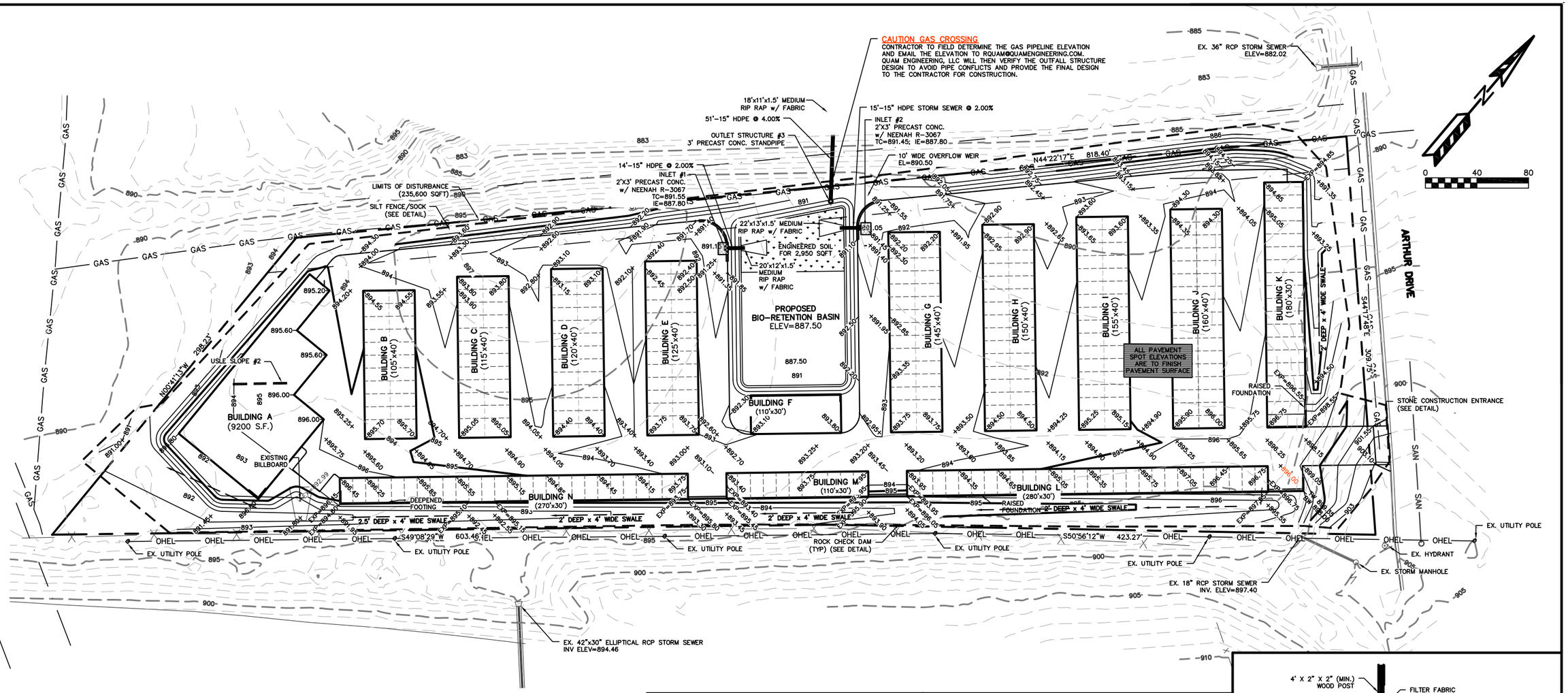


## EROSION NOTES:

THE STONE CONSTRUCTION ENTRANCE SHALL BE INSTALLED PRIOR TO ANY CONSTRUCTION. THE TRACKING PAD IS TO BE MAINTAINED BY THE CONTRACTOR IN A CONDITION, WHICH WILL PREVENT THE TRACK OF MUD OR DRY SEDIMENT ONTO THE ADJACENT PUBLIC STREETS. SEDIMENT REACHING THE PUBLIC ROAD SHALL BE REMOVED BY STREET CLEANING (NOT HYDRAULIC FLUSHING) BEFORE THE END OF EACH WORKDAY.

EROSION CONTROL DEVICES SHALL BE INSTALLED PRIOR TO GRADING OPERATIONS AND SHALL BE PROPERLY MAINTAINED FOR MAXIMUM EFFECTIVENESS UNTIL VEGETATION IS ESTABLISHED. ALL EROSION CONTROL MEASURES AND STRUCTURES SERVING THE SITE MUST BE INSPECTED AT LEAST WEEKLY OR WITHIN 24 HOURS OF A 0.5 INCH RAIN EVENT. ALL MAINTENANCE WILL FOLLOW AN INSPECTION WITHIN 24 HOURS.

CUT AND FILL SLOPES SHALL BE NO GREATER THAN 3:1.

EROSION CONTROL IS THE RESPONSIBILITY OF THE CONTRACTOR UNTIL ACCEPTANCE OF THIS PROJECT. EROSION CONTROL MEASURES AS SHOWN SHALL BE THE MINIMUM PRECAUTIONS THAT WILL BE ALLOWED. THE CONTRACTOR SHALL BE RESPONSIBLE FOR RECOGNIZING AND CORRECTING ALL EROSION CONTROL PROBLEMS THAT ARE A RESULT OF CONSTRUCTION ACTIVITIES. ADDITIONAL EROSION CONTROL MEASURES, AS REQUESTED IN WRITING BY THE STATE OR LOCAL INSPECTORS, OR THE DEVELOPER'S ENGINEER, SHALL BE INSTALLED WITHIN 24 HOURS.

## TIME SCHEDULE:

| | |
|---|---|
| MAY 1, 2020 | INSTALL INITIAL EROSION CONTROL DEVICES. |
| MAY 1, 2020 – OCTOBER 01, 2020 | CONSTRUCT BUILDINGS & DRIVEWAYS AND RESTORE PERVIOUS DISTURBED AREAS. |

## RESTORATION NOTES:

ALL PERVIOUS DISTURBED AREAS SHALL RECEIVE A MINIMUM OF FOUR (4) INCHES OF TOPSOIL, SEED AND MULCH. ALL PERVIOUS DISTURBED AREAS SHALL RECEIVE FERTILIZER EXCEPT NATIVE PLANTING AREAS. RESTORATION WILL OCCUR AS SOON AFTER THE DISTURBANCE AS PRACTICAL. SEED MIXTURE 40 SHALL BE USED ON ALL OTHER DISTURBED AREAS. MIXTURES SHALL BE IN ACCORDANCE WITH SECTION 630 OF D.O.T. SPECIFICATIONS. AN EQUAL AMOUNT OF ANNUAL RYEGRASS SHALL BE ADDED TO THE MIX.

SEED MIXTURES SHALL BE APPLIED AT THE RATE OF FOUR (4) POUNDS PER 1,000 SQUARE FEET. FERTILIZER SHALL BE APPLIED AT THE RATE OF FOUR (4) POUNDS PER 1,000 SQUARE FEET. MULCH SHALL CONSIST OF HAY OR STRAW APPLIED AT THE RATE OF 2 TONS PER ACRE.

FERTILIZER SHALL MEET THE MINIMUM REQUIREMENTS THAT FOLLOW: NITROGEN, NOT LESS THAN 16%; PHOSPHORIC ACID, NOT LESS THAN 8%; POTASH, NOT LESS THAN 8%.

**OWNER:**
B&J STORAGE
ATTN: LARRY SCHULZ
4704 DROTT DRIVE
JANESVILLE, WI 53346

**ENGINEER:**
QUAM ENGINEERING, LLC
ATTN: RYAN QUAM
4604 SIGGELKOW ROAD, SUITE A
MCFARLAND, WI 53558

TO OBTAIN LOCATION OF PARTICIPANTS' UNDERGROUND FACILITIES BEFORE YOU DIG IN WISCONSIN

**CALL DIGGERS HOTLINE**
**1-800-242-8511**
**TOLL FREE**
TDD(FOR THE HEARING IMPAIRED)(800)542-2289

WIS. STATUTE 182.0175 (1974) REQUIRES MIN. OF 3 WORK DAYS NOTICE BEFORE YOU EXCAVATE

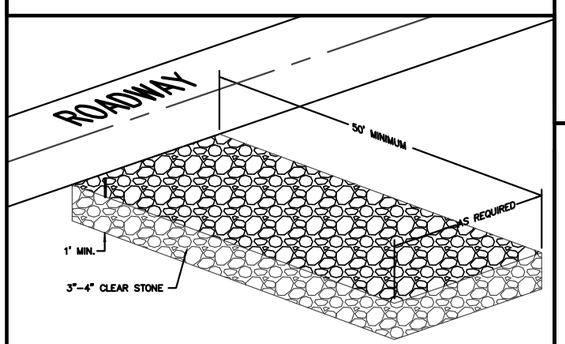


**STONE CONSTRUCTION ENTRANCE**

– INSTALL FLEXSTORM CATCH-IT INLET PROTECTION.

– INSTALL WISDOT CLASS 1 TYPE B EROSION MATTING.

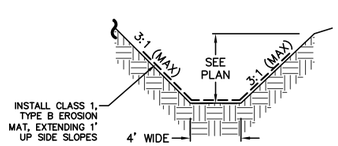


**SWALE CROSS SECTION**

MAINTAIN SILT SOCKS UNTIL VEGETATION IS ESTABLISHED.

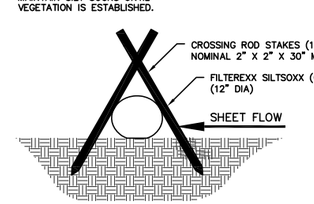


**SILT SOCK DETAIL**

BIO-RETENTION DEVICE SHALL CONFORM TO WISCONSIN DNR TECHNICAL STANDARD #1004

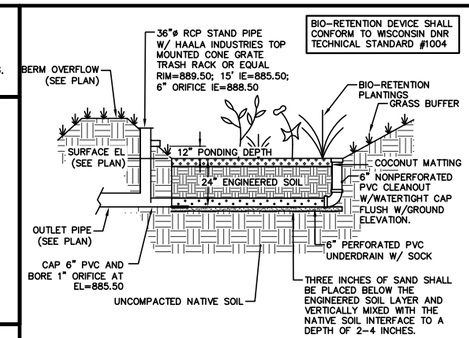


SEE PLAN VIEW FOR ELEVATIONS AND OTHER INFORMATION.

ENGINEERED SOIL SHALL CONSIST OF THE FOLLOWING:
70% SILICA SAND; 30% COMPOST W/ PH 5.5-6.5
**COMPOST SHALL MEET WDNR SPECIFICATION S100.**
STORAGE/INTERFACE LAYER SHALL CONSIST OF SAND AS FOLLOWS:
SAND: WASHED QUARTZ OR SILICA 0.02 – 0.04 INCHES IN DIA.

BIORETENTION PLANTINGS TO BE PLANTED AT ONE PLUG PER SQUARE FOOT. PLUGS TO BE PLANT STOCK NAMED IN THE WET PRAIRIE MIX FROM AGRECOL CORPORATION OR APPROVED EQUIVALENT. A MINIMUM OF 10 DIFFERENT PLANT STOCK NAMES TO BE PLANTED.

TO PREVENT COMPACTION OF ENGINEERED SOIL AND SUBSOILS, CONTRACTOR SHALL PROTECT AGAINST MACHINERY ENTERING OR COMPACTING THE BIO-RETENTION AREA.

CONTRACTOR SHALL PROVIDE COPY OF DELIVERY TICKET OR INVOICE FOR ENGINGEERED SOIL & SAND STORAGE LAYER FOR AS-BUILT CERTIFICATION PURPOSES.

**BIO-RETENTION BASIN DETAIL**

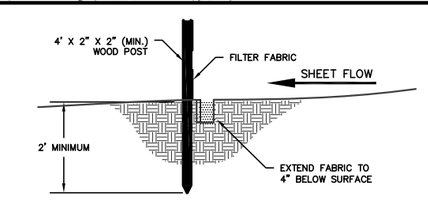


**SILT FENCE CONSTRUCTION (SHEET FLOW)**

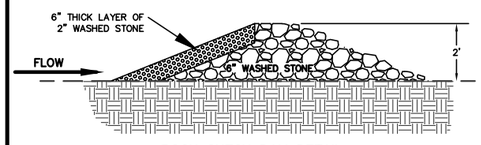


**ROCK CHECK DAM DETAIL**

# ARTHUR DRIVE MINI-WAREHOUSES – CITY OF MILTON

GRADING AND EROSION CONTROL PLAN
PAGE: 3 OF 5
DATED: MAY 27, 2020

QUAM ENGINEERING, LLC
Residential and Commercial Site Design Consultants
www.quamengineering.com
4604 Siggelkow Road, Suite A – McFarland, Wisconsin 53558
Phone (608) 838-7750; Fax (608) 838-7752

QUAM ENGINEERING, LLC 4604 Siggelkow Road, Suite A – McFarland, WI 53558 (608) 838-7750 \LS-04-19\LS04BASE.DWG

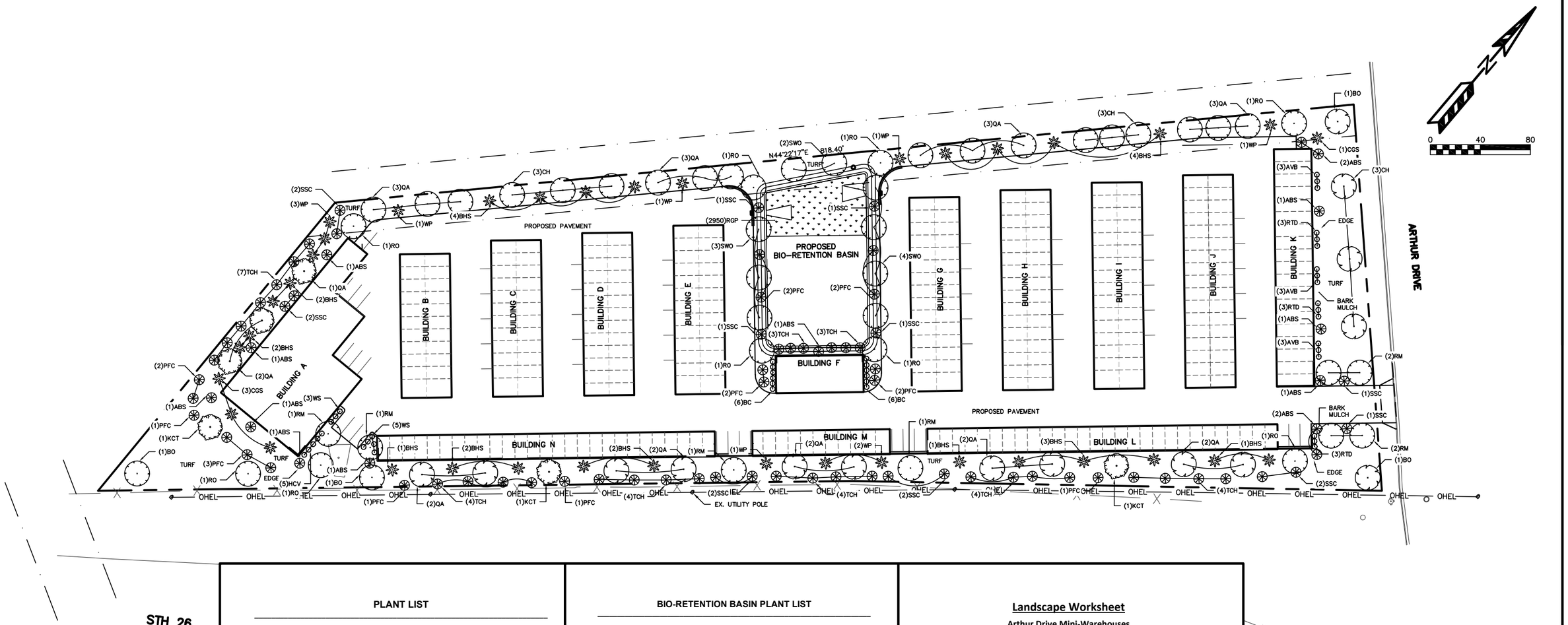


## PLANT LIST

| KEY | QUAN | SIZE | COMMON NAME | ROOT |
|---|---|---|---|---|
| | 68 | | Tall Deciduous Trees | |
| BO | 4 | 2" | Bur Oak | BB |
| CH | 9 | 2" | Hackberry | BB |
| KCT | 3 | 2" | Kentucky Coffee Tree | BB |
| RM | 8 | 2" | Red Maple | BB |
| QA | 26 | 2" | Quaking Aspen | BB |
| RO | 9 | 2" | Red Oak | BB |
| SWO | 9 | 2" | Swamp White Oak | BB |
| | 80 | | Low Deciduous Trees | |
| ABS | 14 | 1 ½" | Autumn Brilliance Serviceberry | BB |
| PFC | 17 | 1 ½" | Prairie Fire Crab | BB |
| SSC | 16 | 1 ½"' | Spring Snow Crab | BB |
| TCH | 33 | 1 ½" | Thornless Cockspur Hawthorn | BB |
| | 37 | | Evergreen Trees | |
| BHS | 23 | 5' | Black Hills Spruce | BB |
| CGS | 4 | 5' | Colorado Green Spruce | BB |
| WP | 10 | 5' | White Pine | BB |
| | 47 | | Shrubs | |
| AVB | 9 | 24" | Arrowood Viburnum | Pot |
| BC | 12 | 18" | Black Chokeberry | Pot |
| HCV | 5 | 24" | Highbush Cranberry Viburnum | Pot |
| RTD | 9 | 24" | Bailey's Red Twig Dogwood | Pot |
| WS | 8 | 18" | White Snowberry | Pot |

**NOTES:**

1) Turf areas shall receive a minimum of 4" of topsoil, shall be seeded with no-mow seed mix, fertilized, and mulched with straw or straw mat mulch.
2) Turf areas in drainage swales and on slopes greater than 3:1 shall be protected with erosion control fabric.
3) Designated planting beds to be mulched with shredded hardwood bark to a depth of 3".
4) Individual trees and shrub groupings in lawn areas to receive shredded hardwood bark mulch plant rings (4' diameter) spread to a depth of 3".
5) Designated planting beds to be separated from lawn areas with a 5' shovel edge.
6) Owner will be responsible for landscape maintenance after completion and acceptance of the project.

## BIO-RETENTION BASIN PLANT LIST

| KEY | QUAN | SIZE | COMMON NAME | ROOT |
|---|---|---|---|---|
| RGP | 2,950 | 2 ½" | Bio-retention Plantings (Planted 12' on center) | plug |
| | | | Common Blue Star | |
| | | | Bottle Gentine | |
| | | | Obedient Plant | |
| | | | Columbine | |
| | | | Switchgrass | |
| | | | Black Eyed Susan | |
| | | | Wild Iris | |
| | | | Swamp Milkweed | |
| | | | White Turtlehead | |
| | | | Cardinal Flower | |
| | | | Turk's Cap Lily | |
| | | | Little Bluestem | |
| | | | Canada Wild Rye | |
| | | | Nodding Onion | |

**BIO-RETENTION BASIN NOTES:**

1) Bio-retention basin to receive coconut mat mulch or shredded hardwood bark much spread to a thickness of 2".
2) Bio-retention plants (RGP) to be installed 12" on center.
3) Bio-retention basin to be constructed per WDNR specifications.
4) Owner will be responsible for maintenance after completion and acceptance of the project.

## Landscape Worksheet

**Arthur Drive Mini-Warehouses**
**City of Milton, WI**

| | | |
|---|---|---|
| **Total Lot Area Length:** | | **240,950 SF** |
| Building Area: | 76,400 SF | |
| Paved Area: | 90,000 SF | |
| Open/Green Space Area: | 74,550 SF | |
| **Total Right of Way (ROW) Length:** | | **1,336 LF** |
| Arthur Drive: | 310 LF | |
| STH 26: | 1,026 LF | |
| **Total Building Foundation Length:** | | **5,590 LF** |
| **Building Foundation** | | |
| Points Required: | 5,590 LF/100 LF x 150 points = | **8,835 points required** |
| Points Supplied: | | **8,860 points supplied** |
| Large Deciduous Trees: | 14 x 150 = 2,100 points supplied | |
| Low Deciduous Trees: | 70 x 60 = 4,200 points supplied | |
| Evergreen Trees: | 27 x 60 = 1,620 Points supplied | |
| Shrubs: | 47 x 20 = 940 Points supplied | |
| **Paved Areas** | | |
| Large Deciduous Trees Required: | 90,000 SF/2,250 SF x 1 tree = | **40 trees required** |
| Large Deciduous Trees Supplied: | | **40 trees supplied** |
| Points Required: | 90,000 SF/2,250 SF x 30 points = | **1,180 points required** |
| Points Supplied: | | **1,200 points supplied** |
| Low Deciduous Trees: | 10 x 60 = 600 points supplied | |
| Evergreen trees: | 10 x 60 = 600 Points supplied | |
| **Street Frontage** | | |
| Large Deciduous Trees Required: | 1,336 LF/100 LF x 1 tree = | **14 trees required** |
| Large Deciduous Trees Supplied: | | **14 trees supplied** |

**(Per Milton, Wisconsin code of Ordinances Part II: Chapter 78 – Zoning, Article IV - Supplemental Regulations, Division 5 – Landscaping, Subdivision II – Landscape Planting Requirements for Commercial and Multifamily Development)**

S·P·S
Paul Skidmore, Landscape Architect LLC
Paul Skidmore, ASLA
Landscape Architect
13Red Maple Trail
Madison, WI 53717
(608) 826-0032
(608) 335-1529 (c)
paulskidmore@tds.net

**ARTHUR DRIVE MINI-WAREHOUSES – CITY OF MILTON**
LANDSCAPE PLAN
PAGE: 4 OF 5
DATED: MAY 27, 2020

QUAM ENGINEERING, LLC
Residential and Commercial Site Design Consultants
www.quamengineering.com
4604 Siggelkow Road, Suite A – McFarland, Wisconsin 53558
Phone (608) 838-7750; Fax (608) 838-7752

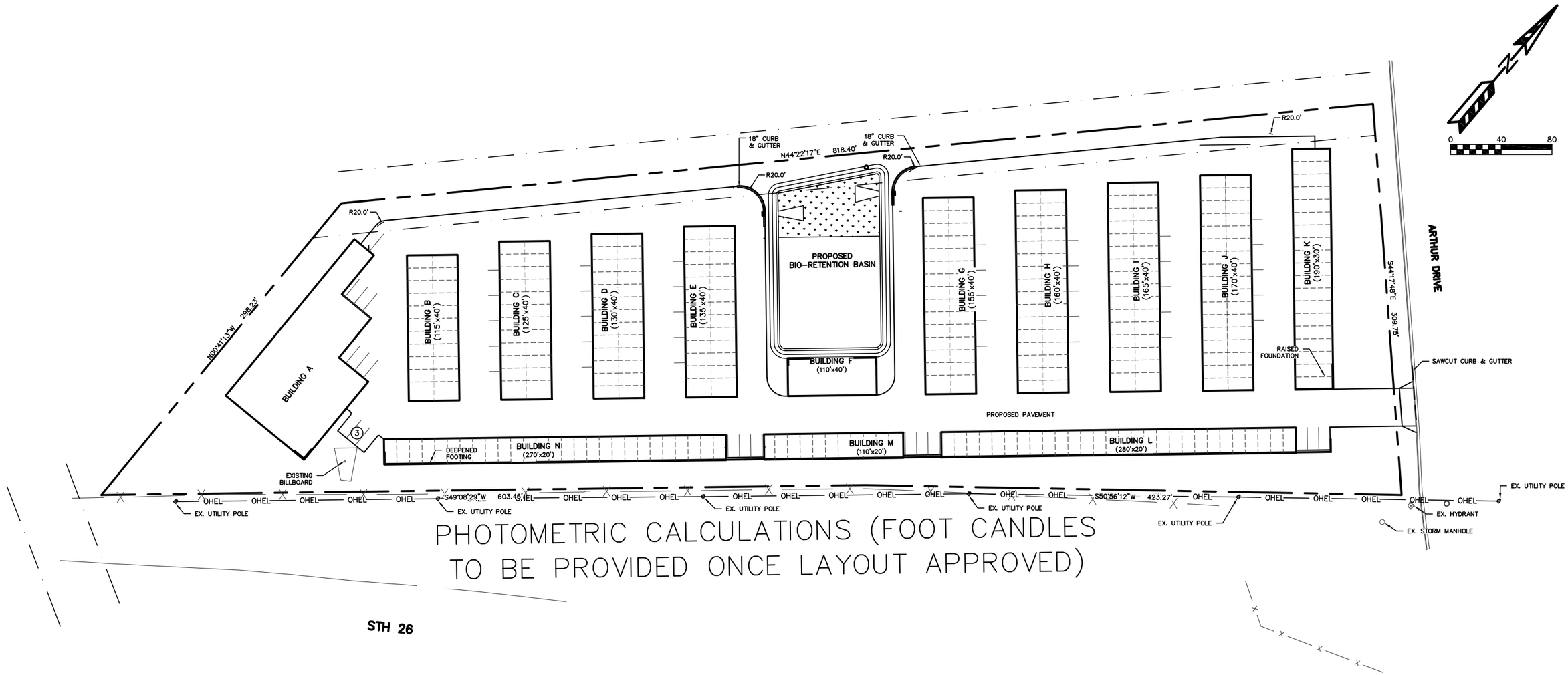


PHOTOMETRIC CALCULATIONS (FOOT CANDLES TO BE PROVIDED ONCE LAYOUT APPROVED)

ENTERPRISE Lighting & Control

**ARTHUR DRIVE MINI-WAREHOUSES – CITY OF MILTON**

LIGHTING PLAN

PAGE: 5 OF 5

DATED: MAY 27, 2020

QUAM ENGINEERING, LLC
Residential and Commercial Site Design Consultants
www.quamengineering.com
4604 Siggelkow Road, Suite A – McFarland, Wisconsin 53558
Phone (608) 838-7750; Fax (608) 838-7752

QUAM ENGINEERING, LLC 4604 Siggelkow Road, Suite A – McFarland, WI 53558 (608) 838-7750 \LS-04-19\LS04BASE.DWG

QUAM ENGINEERING, LLC
Residential and Commercial Site Design Consultants

February 4, 2020

**City of Milton**
Attn: Howard Robinson
710 S. Janesville St
Milton, WI 53563

Re: Arthur Drive Mini Warehouses

Enclosed are the following documents for the above referenced project:

1.) Existing Site Plan;
2.) Site Plan;
3.) Grading and Erosion Control Plan;
4.) Drainage Map;
5.) Universal Soil Loss Equation (USLE) Worksheet;
6.) Storm Sewer Rational Method Worksheet;
7.) Rip Rap Sizing Calculations;
8.) Pre- and Post-Development HydroCAD Reports;
9.) Sediment Control and Infiltration Calculations;
10.) Erosion Mat and Swale Velocity Calculations;
11.) Cost Estimate;
12.) Soils Information;
13.) Stormwater Maintenance Plan

The documents are being submitted to address erosion control and stormwater management requirements for the proposed development and will meet the following performance standards as defined in the City of Milton Ordinance and Wisconsin NR 151 standards as follows:

**Erosion Control**
***The proposed construction shall include erosion control measures to prevent gully and bank erosion and limit total off-site erosion to less than 5.0 tons per acre per year.***

All runoff during construction shall be directed to flow through erosion control measures as shown on the Grading and Erosion Control Plan. The USLE calculation worksheet is included and indicates that soil loss will be less than 5.0 tons per acre per year.

**Sediment Control**
***For new development, BMP's shall be designed to reduce to the maximum extent practicable, the total suspended solids load by 80%, based on average annual rainfall, as compared to no management controls.***

The proposed bioretention basin will provide sediment control for the site as shown in the attached sediment control calculations.

4604 Siggelkow Road, Suite A ♦ McFarland, Wisconsin 53558 ♦ www.quamengineering.com
Phone (608) 838-7750 ♦ Fax (608) 838-7752 ♦ E-mail rquam@quamengineering.com

**Runoff Rate Control**

***BMP's shall be designed to maintain or reduce, to the maximum extent practicable, as compared to pre-development conditionally the 2-year, 24-hour design storm applicable to the post-construction site. In addition, the DNR standard states BMP's shall be employed to maintain or reduce the 1-year, 24-hour post-construction peak runoff discharge rate to the 1-year, 24-hour pre-development peak runoff discharge rate.***

The proposed bioretention basin will provide rate runoff control for the entire site as shown in the attached HydroCAD calculations. The following results table includes pre and post development runoff rates.

| Storm Event (Year) | Total Existing Flow Rate (cfs) | Total Proposed Flow Rate Without Bio Basin (cfs) | Total Proposed Flow Rate With Bio Basin (cfs) |
|---|---|---|---|
| 1 | 3.16 | 15.33 | 2.13 |
| 2 | 4.89 | 18.27 | 2.96 |
| 10 | 11.85 | 28.31 | 7.69 |
| 100 | 28.11 | 47.94 | 23.55 |

**Infiltration**

***For non-residential development, infiltrate sufficient runoff volume so that the post-development infiltration volume shall be at least 60% of the pre-development infiltration volume, based on average annual rainfall. Alternatively, infiltrate 10% of the runoff from the 2-year, 24-hour design storm with a type II distribution. No more than 2% of the project site is required as an effective infiltration area. In addition, the DNR standard states for high imperviousness (development with more than 80% connected imperviousness), infiltrate sufficient runoff volume so that the post-development infiltration volume shall be at least 60% of the pre-development infiltration volume, based on average annual rainfall. No more than 2% of the post-construction site is required as an effective infiltration area.***

The proposed bioretention basin will infiltrate 60% of the pre-development infiltration volume for the site as shown in the attached infiltration calculations.

**Protective Areas**

***A protective area shall be established as measured horizontally from the top of the channel or delineated wetland boundary to the closest impervious surface.***

The project is located outside the protective area specified in the Ordinance. Therefore, the protective area standard does not apply.

**<u>Fueling and Vehicle Maintenance Areas</u>**
***Fueling and vehicle maintenance areas shall, to the maximum extent practicable, have BMP's designed to reduce petroleum within runoff, such that runoff that enters waters of the state contains no visible petroleum sheen.***

The project does not contain a fueling or vehicle maintenance area. Therefore, the fueling and vehicle maintenance standard does not apply.

If the documents are satisfactory, please provide the erosion control and storm water management approval. If you have any questions or comments, please feel free to contact me.
Sincerely,

Aaron Falkosky, P.E.

CC: Marie Chesebro w/ enc. via email

FN: LS-04-20

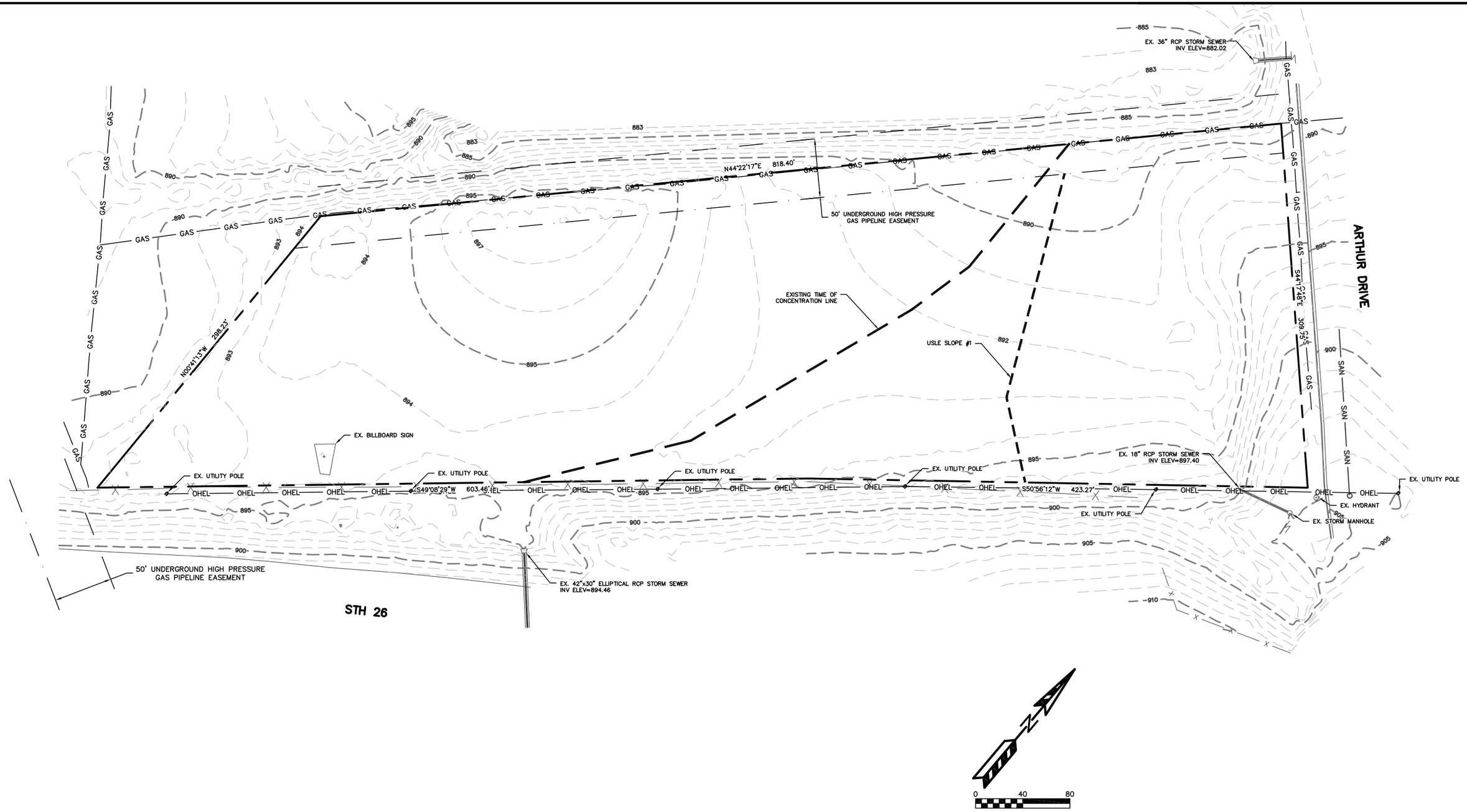


**ARTHUR DRIVE MINI-WAREHOUSES**
**– CITY OF MILTON**
EXISTING SITE PLAN

EXHIBIT #1
DATED: FEBRUARY 4, 2020

QUAM ENGINEERING, LLC
Residential and Commercial Site Design Consultants
www.quamengineering.com
4604 Siggelkow Road, Suite A – McFarland, Wisconsin 53558
Phone (608) 838-7750; Fax (608) 838-7752

QUAM ENGINEERING, LLC 4604 Siggelkow Road, Suite A – McFarland, WI 53558 (608) 838-7750 \LS-04-19\LS04BASE.DWG

QUAM ENGINEERING, LLC 4604 Siggelkow Road, Suite A – McFarland, WI 53558 (608) 838-7750 \LS-04-19\LS04BASE.DWG

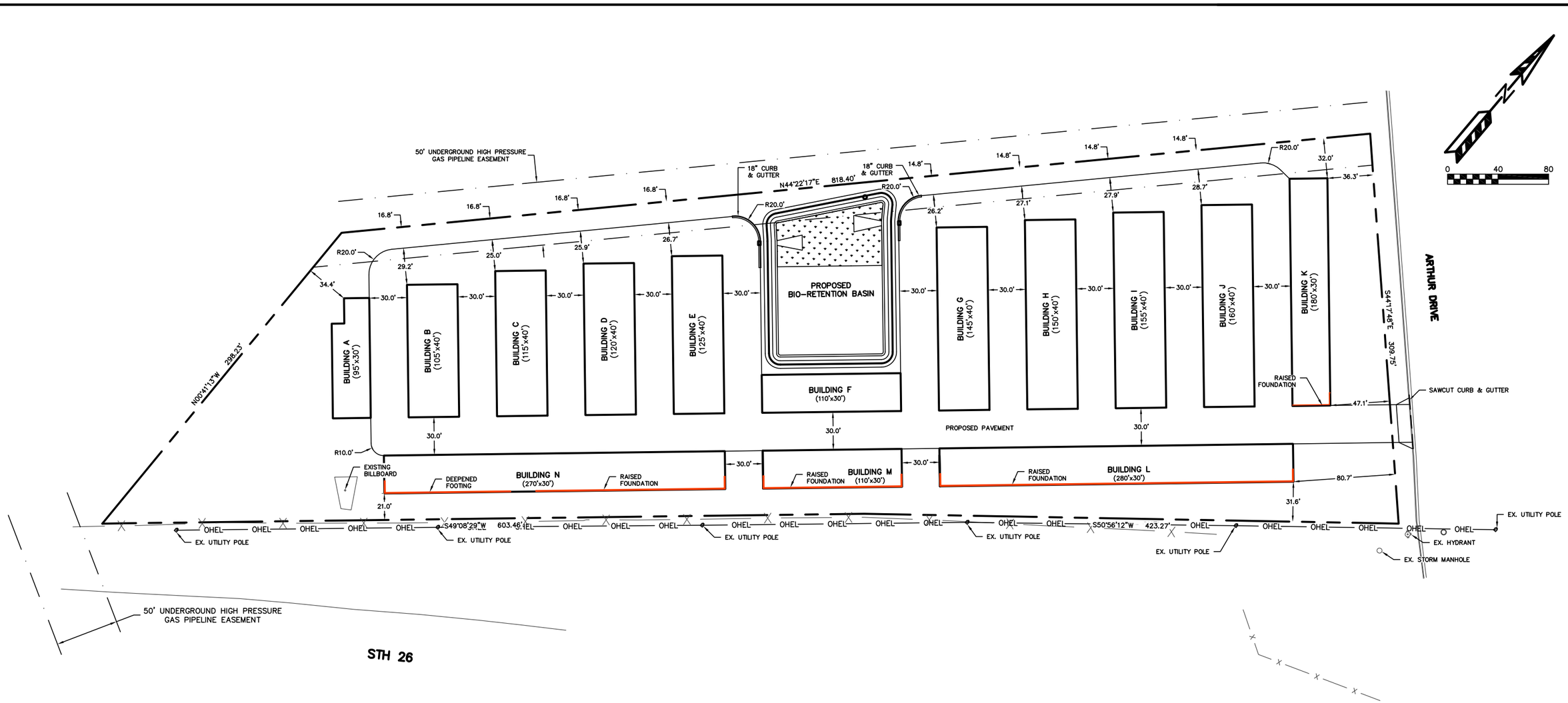


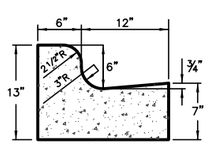


18" STANDARD CONCRETE CURB & GUTTER

**ARTHUR DRIVE MINI-WAREHOUSES – CITY OF MILTON**

SITE PLAN

EXHIBIT #2

DATED: FEBRUARY 4, 2020

QUAM ENGINEERING, LLC
Residential and Commercial Site Design Consultants
www.quamengineering.com
4604 Siggelkow Road, Suite A – McFarland, Wisconsin 53558
Phone (608) 838-7750; Fax (608) 838-7752

QUAM ENGINEERING, LLC 4604 Siggelkow Road, Suite A – McFarland, WI 53558 (608) 838-7750 \LS-04-19\LS04BASE.DWG

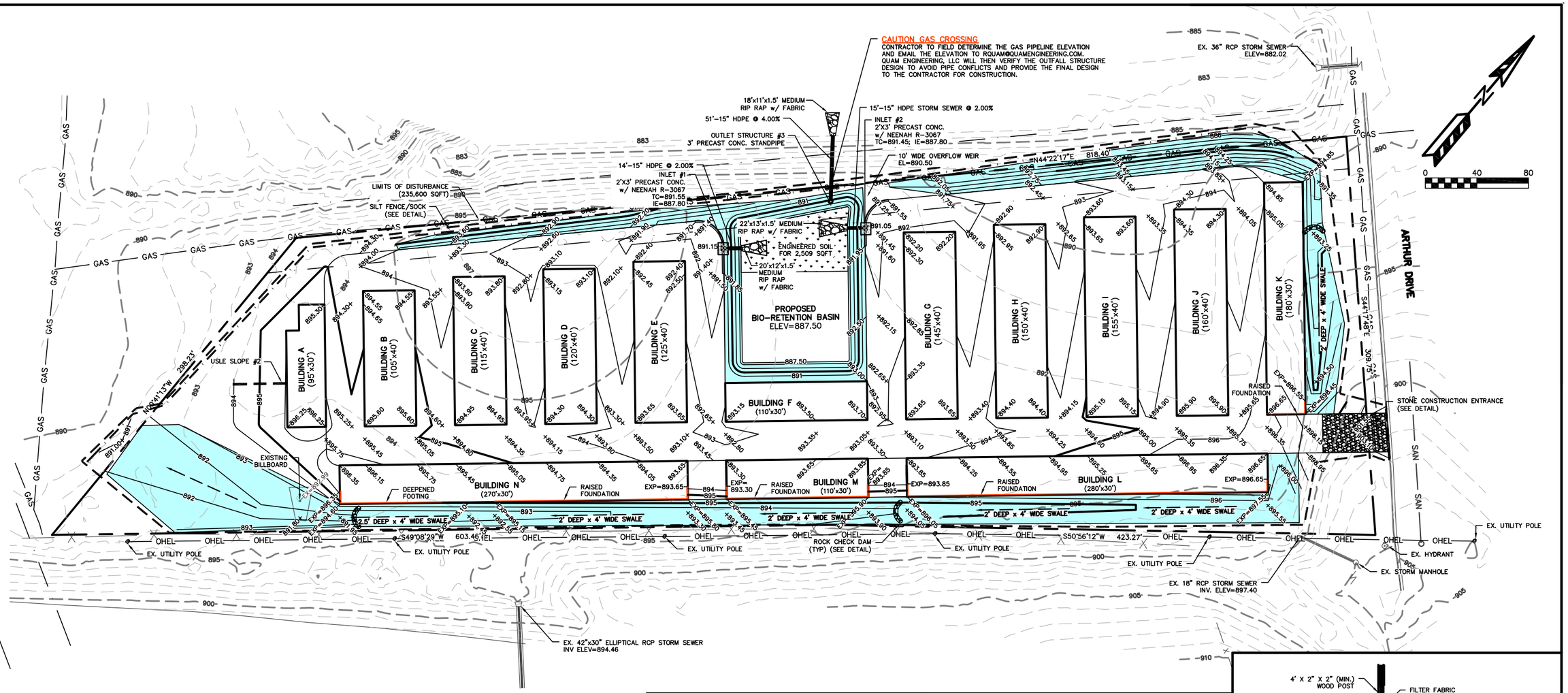


## EROSION NOTES:

THE STONE CONSTRUCTION ENTRANCE SHALL BE INSTALLED PRIOR TO ANY CONSTRUCTION. THE TRACKING PAD IS TO BE MAINTAINED BY THE CONTRACTOR IN A CONDITION, WHICH WILL PREVENT THE TRACK OF MUD OR DRY SEDIMENT ONTO THE ADJACENT PUBLIC STREETS. SEDIMENT REACHING THE PUBLIC ROAD SHALL BE REMOVED BY STREET CLEANING (NOT HYDRAULIC FLUSHING) BEFORE THE END OF EACH WORKDAY.

EROSION CONTROL DEVICES SHALL BE INSTALLED PRIOR TO GRADING OPERATIONS AND SHALL BE PROPERLY MAINTAINED FOR MAXIMUM EFFECTIVENESS UNTIL VEGETATION IS ESTABLISHED. ALL EROSION CONTROL MEASURES AND STRUCTURES SERVING THE SITE MUST BE INSPECTED AT LEAST WEEKLY OR WITHIN 24 HOURS OF A 0.5 INCH RAIN EVENT. ALL MAINTENANCE WILL FOLLOW AN INSPECTION WITHIN 24 HOURS.

CUT AND FILL SLOPES SHALL BE NO GREATER THAN 3:1.

EROSION CONTROL IS THE RESPONSIBILITY OF THE CONTRACTOR UNTIL ACCEPTANCE OF THIS PROJECT. EROSION CONTROL MEASURES AS SHOWN SHALL BE THE MINIMUM PRECAUTIONS THAT WILL BE ALLOWED. THE CONTRACTOR SHALL BE RESPONSIBLE FOR RECOGNIZING AND CORRECTING ALL EROSION CONTROL PROBLEMS THAT ARE A RESULT OF CONSTRUCTION ACTIVITIES. ADDITIONAL EROSION CONTROL MEASURES, AS REQUESTED IN WRITING BY THE STATE OR LOCAL INSPECTORS, OR THE DEVELOPER'S ENGINEER, SHALL BE INSTALLED WITHIN 24 HOURS.

## TIME SCHEDULE:

| | |
|---|---|
| MAY 1, 2020 | INSTALL INITIAL EROSION CONTROL DEVICES. |
| MAY 1, 2020 – OCTOBER 01, 2020 | CONSTRUCT BUILDINGS & DRIVEWAYS AND RESTORE PERVIOUS DISTURBED AREAS. |

## RESTORATION NOTES:

ALL PERVIOUS DISTURBED AREAS SHALL RECEIVE A MINIMUM OF FOUR (4) INCHES OF TOPSOIL, SEED AND MULCH. ALL PERVIOUS DISTURBED AREAS SHALL RECEIVE FERTILIZER EXCEPT NATIVE PLANTING AREAS. RESTORATION WILL OCCUR AS SOON AFTER THE DISTURBANCE AS PRACTICAL. SEED MIXTURE 40 SHALL BE USED ON ALL OTHER DISTURBED AREAS. MIXTURES SHALL BE IN ACCORDANCE WITH SECTION 630 OF D.O.T. SPECIFICATIONS. AN EQUAL AMOUNT OF ANNUAL RYEGRASS SHALL BE ADDED TO THE MIX.

SEED MIXTURES SHALL BE APPLIED AT THE RATE OF FOUR (4) POUNDS PER 1,000 SQUARE FEET. FERTILIZER SHALL BE APPLIED AT THE RATE OF FOUR (4) POUNDS PER 1,000 SQUARE FEET. MULCH SHALL CONSIST OF HAY OR STRAW APPLIED AT THE RATE OF 2 TONS PER ACRE.

FERTILIZER SHALL MEET THE MINIMUM REQUIREMENTS THAT FOLLOW: NITROGEN, NOT LESS THAN 16%; PHOSPHORIC ACID, NOT LESS THAN 8%; POTASH, NOT LESS THAN 8%.

**OWNER:**
B&J STORAGE
ATTN: LARRY SCHULZ
4704 DROTT DRIVE
JANESVILLE, WI 53346

**ENGINEER:**
QUAM ENGINEERING, LLC
ATTN: RYAN QUAM
4604 SIGGELKOW ROAD, SUITE A
MCFARLAND, WI 53558

TO OBTAIN LOCATION OF PARTICIPANTS' UNDERGROUND FACILITIES BEFORE YOU DIG IN WISCONSIN

**CALL DIGGERS HOTLINE**
**1-800-242-8511**
**TOLL FREE**
TDD(FOR THE HEARING IMPAIRED)(800)542-2289

WIS. STATUTE 182.0175 (1974) REQUIRES MIN. OF 3 WORK DAYS NOTICE BEFORE YOU EXCAVATE

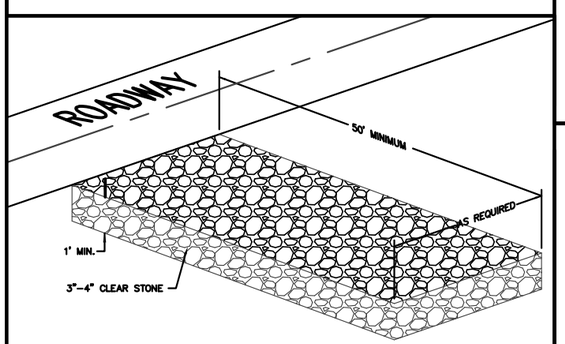


STONE CONSTRUCTION ENTRANCE

– INSTALL FLEXSTORM CATCH-IT INLET PROTECTION.

– INSTALL WISDOT CLASS 1 TYPE B EROSION MATTING.

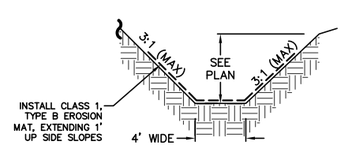


SWALE CROSS SECTION

MAINTAIN SILT SOCKS UNTIL VEGETATION IS ESTABLISHED.

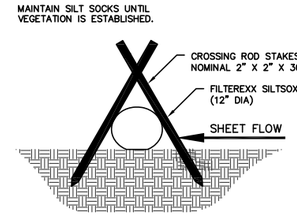


SILT SOCK DETAIL

BIO-RETENTION DEVICE SHALL CONFORM TO WISCONSIN DNR TECHNICAL STANDARD #1004

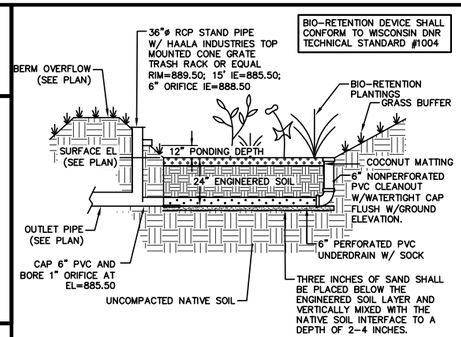


SEE PLAN VIEW FOR ELEVATIONS AND OTHER INFORMATION.

ENGINEERED SOIL SHALL CONSIST OF THE FOLLOWING:
70% SILICA SAND; 30% COMPOST W/ PH 5.5-6.5
**COMPOST SHALL MEET WDNR SPECIFICATION S100.**
STORAGE/INTERFACE LAYER SHALL CONSIST OF SAND AS FOLLOWS:
SAND: WASHED QUARTZ OR SILICA 0.02 – 0.04 INCHES IN DIA.

BIORETENTION PLANTINGS TO BE PLANTED AT ONE PLUG PER SQUARE FOOT. PLUGS TO BE PLANT STOCK NAMED IN THE WET PRAIRIE MIX FROM AGRECOL CORPORATION OR APPROVED EQUIVALENT. A MINIMUM OF 10 DIFFERENT PLANT STOCK NAMES TO BE PLANTED.

TO PREVENT COMPACTION OF ENGINEERED SOIL AND SUBSOILS, CONTRACTOR SHALL PROTECT AGAINST MACHINERY ENTERING OR COMPACTING THE BIO-RETENTION AREA.

CONTRACTOR SHALL PROVIDE COPY OF DELIVERY TICKET OR INVOICE FOR ENGINGEERED SOIL & SAND STORAGE LAYER FOR AS-BUILT CERTIFICATION PURPOSES.

BIO-RETENTION BASIN DETAIL

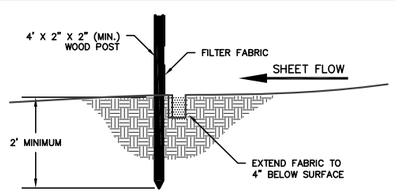


SILT FENCE CONSTRUCTION (SHEET FLOW)

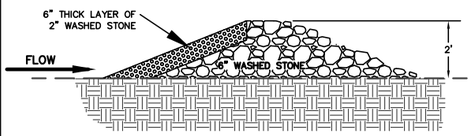


ROCK CHECK DAM DETAIL

**ARTHUR DRIVE MINI-WAREHOUSES – CITY OF MILTON**
GRADING AND EROSION CONTROL PLAN
EXHIBIT #3
DATED: FEBRUARY 4, 2020

QUAM ENGINEERING, LLC
Residential and Commercial Site Design Consultants
www.quamengineering.com
4604 Siggelkow Road, Suite A – McFarland, Wisconsin 53558
Phone (608) 838-7750; Fax (608) 838-7752

QUAM ENGINEERING, LLC 4604 Siggelkow Road, Suite A – McFarland, WI 53558 (608) 838-7750 \LS-04-19\LS04BASE.DWG

0 100 200

AREA TO INLET #1 (AND BIO BASIN)

AREA TO INLET #2 (AND BIO BASIN)

AREA TO SOUTH DRAINAGE SWALE

AREA TO NORTH DRAINAGE SWALE

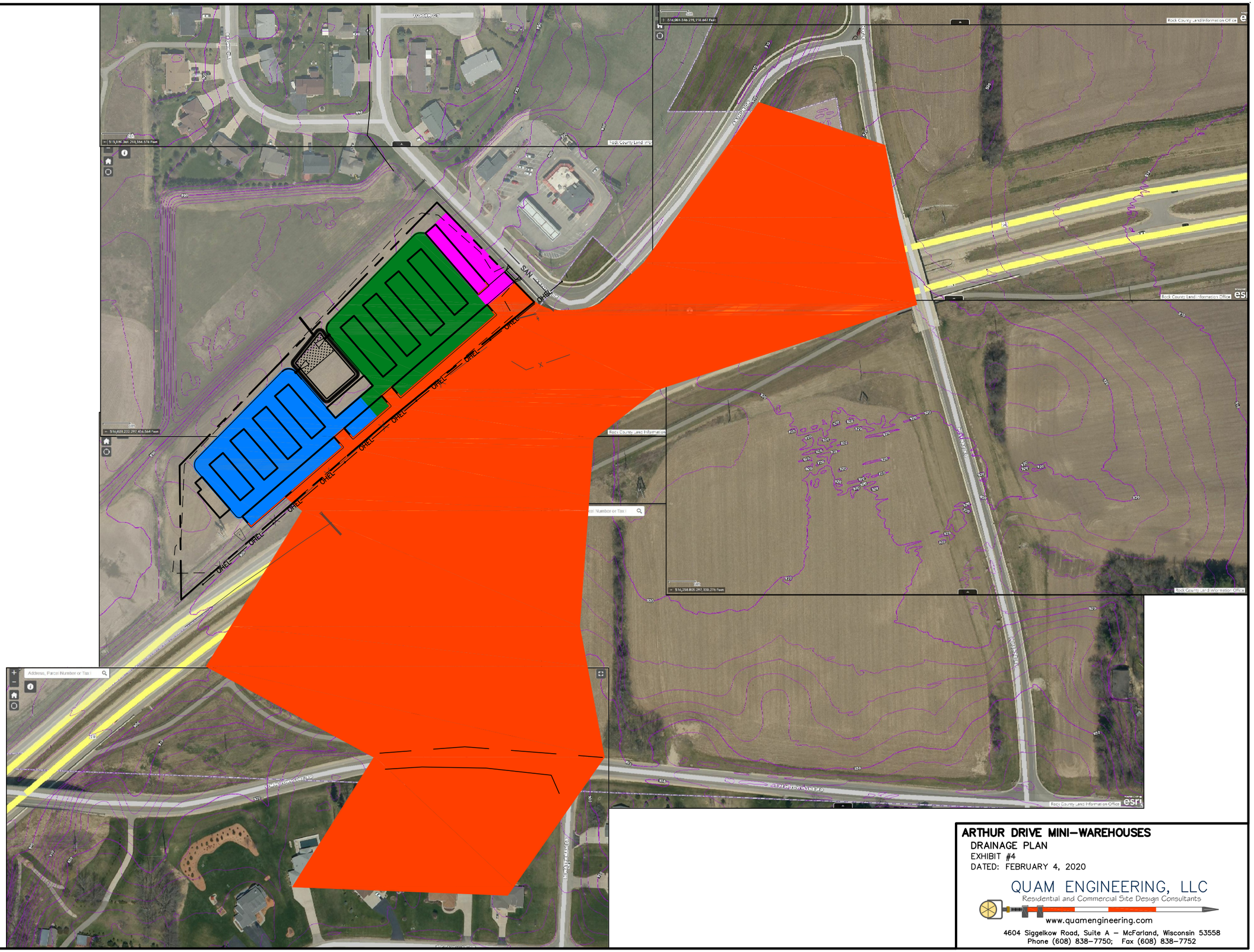


**ARTHUR DRIVE MINI-WAREHOUSES**

DRAINAGE PLAN

EXHIBIT #4

DATED: FEBRUARY 4, 2020


QUAM ENGINEERING, LLC

Residential and Commercial Site Design Consultants

www.quamengineering.com

4604 Siggelkow Road, Suite A – McFarland, Wisconsin 53558

Phone (608) 838-7750; Fax (608) 838-7752

# Soil Loss & Sediment Discharge Calculation Tool

for use on Construction Sites in the State of Wisconsin

**WDNR Version 2.0 (06-29-2017)**

**YEAR 1**

**Developer:** B&J Storage

**Project:** Arthur Drive Mini Warehouses - City of Milton

**Date:** 02/04/20

**County:** Rock

Version 1.0

| Activity (1) | Begin Date (2) | End Date (3) | Period % R (4) | Annual R Factor (5) | Sub Soil Texture (6) | Soil Erodibility K Factor (7) | Slope (%) (8) | Slope Length (ft) (9) | LS Factor (10) | Land Cover C Factor (11) | Soil loss A (tons/acre) (12) | SDF (13) | Sediment Control Practice (14) | Sediment Discharge (t/ac) (15) |
|---|---|---|---|---|---|---|---|---|---|---|---|---|---|---|
| Bare Ground | 05/01/20 | 05/14/20 | 4.6% | 150 | Silt Loam | 0.43 | 1.0% | 260 | 0.17 | 1.00 | 0.5 | 0.745 | Silt Fence | 0.2 |
| Bare Ground | 05/14/20 | 10/01/20 | 77.2% | 150 | Silt Loam | 0.43 | 2.0% | 40 | 0.15 | 1.00 | 7.6 | 0.982 | Silt Fence | 4.5 |
| Seed with Mulch or Er | 10/01/20 | 12/01/20 | 7.9% | 150 | Silt Loam | 0.43 | 2.0% | 40 | 0.15 | 0.10 | 0.1 | 0.982 | Silt Fence | 0.0 |
| End | 12/01/20 | ----- | ----- | ----- | ------- | ----- | | | ----- | ------ | ----- | 0.000 | | 0.0 |
| | | ----- | ----- | ----- | ------- | ----- | | | ----- | ----- | ----- | 0.000 | | 0.0 |
| | | ----- | ----- | ----- | ------- | ----- | | | ----- | ----- | ----- | 0.000 | | 0.0 |
| | | | | | | | | | | **TOTAL** | **8.2** | | **TOTAL** | **4.8** |
| | | | | | | | | | | | | | **% Reduction Required** | **NONE** |

**Notes:**

See Help Page for further descriptions of variables and items in drop-down boxes.
The last land disturbing activity on each sheet must be 'End'. This is either 12 months from the start of construction or final stabilization.
For periods of construction that exceed 12 months, please demonstrate that 5 tons/acre/year is not exceeded in any given 12 month period.

NOTE: THIS TOOL ONLY ADDRESSED SOIL EROSION DUE TO SHEET FLOW. MEASURES TO CONTROL CHANNEL EROSION MAY ALSO BE REQUIRED TO MEET SEDIMENT DISCHARGE REQUIREMENTS.

**Recommended Permanent Seeding Dates:**

| | | | |
|---|---|---|---|
| 4/1-5/15 | and | 8/7-8/29 | Turf, introduced grasses and legumes |
| Thaw-6/30 | | | Native Grasses, forbs, and legumes |

| | |
|---|---|
| Designed By: | MAF |
| Date | 2/4/2020 |

# Rational Method Worksheet

**PROJECT:** Arthur Drive Mini-Warehouses - City of Milton
**DATE:** 2/4/2020

Computed by: BMM
Checked by: AFF

| LOCATION | | BASIN | | RAINFALL - RUNOFF | | | | | | SEWER | | | |
|---|---|---|---|---|---|---|---|---|---|---|---|---|---|
| **Upstream Structure** | **Downstream Structure** | **Runoff Coefficient** (C) | **Area** (acres) | **Design Storm** (Yr) | **Time of Concentration** (min) | **Rain Intensity** (in/hr) | **Direct Runoff** (cfs) | **Other Runoff** (cfs) | **Design Runoff** (cfs) | **Sewer Size** (in) | **Slope of Sewer** (ft/ft) | **Manning's Number** | **Capacity Flowing Full** (cfs) |
| | | C | A | | $T_c$ | I | Q=C*I*A | | | | | n | |
| | | | | | | | | | | | | | |
| Inlet #1 | Outfall #1 | 0.72 | 1.521 | 10 | 5 | 7.20 | 7.89 | 0.00 | 7.89 | 15 | 0.020 | 0.012 | 9.90 |
| | | | | | | | | | | | | | |
| Inlet #2 | Outfall #2 | 0.72 | 1.751 | 10 | 5 | 7.20 | 9.08 | 0.00 | 9.08 | 15 | 0.020 | 0.012 | 9.90 |
| | | | | | | | | | | | | | |
| | | | | | | | | | | | | | |

$C_{10}$=0.72; Commercial, HSG B, 2-6% slopes; from FDM Procedure 13-10-5, Figure 2

I = rainfall intensity for City of Milton, Wisconsin NOAA Atlas 14.

Capacity flowing full was determined using Manning's Equation

# RIP RAP SIZING CALCULATION

## W.D.O.T. FACILITIES DEVELOPMENT MANUAL
## RIPRAP BLANKET DESIGN

| **Given:** | Outfall #1 | |
|---|---|---|
| Storm Sewer Diameter ($D_O$) | 1.25 | feet |
| Discharge ($Q_{10}$) | 7.89 | cfs |
| Discharge full pipe flow (Qfull) | 9.90 | cfs |
| Q/Qfull | 0.80 | |
| Partially full pipe from Figure 1 (y/D) | 0.78 | |
| Tailwater Depth (TW) based on partially full pipe | 0.98 | feet |

**Stone Size:**

| | | |
|---|---|---|
| $d_{50} = D_O(0.020\ (D_O/TW)(Q/D_O^{5/2})^{4/3}) =$ | 0.2393 | feet |
| Use average stone size of: | 3 | inches |

**Length of Stone Protection:**

| | | |
|---|---|---|
| $L_{sp} = D_O(1.7(Q/D_O^{5/2})+8) =$ | 19.60 | feet |
| Use length of: | 20 | feet |

**Width of Stone Protection (at outlet):**

| | | |
|---|---|---|
| $W_{sp} = 3 * D_O$ | 3.75 | feet |
| Use width of: | 4 | feet |

**Width of Stone Protection (at end of blanket):**

| | | |
|---|---|---|
| $W_{sp}$ (max. TW) $= 2(1.5\ D_O + 0.2\ L_{sp})$ | 11.59 | feet |
| Use width of: | 12 | feet |

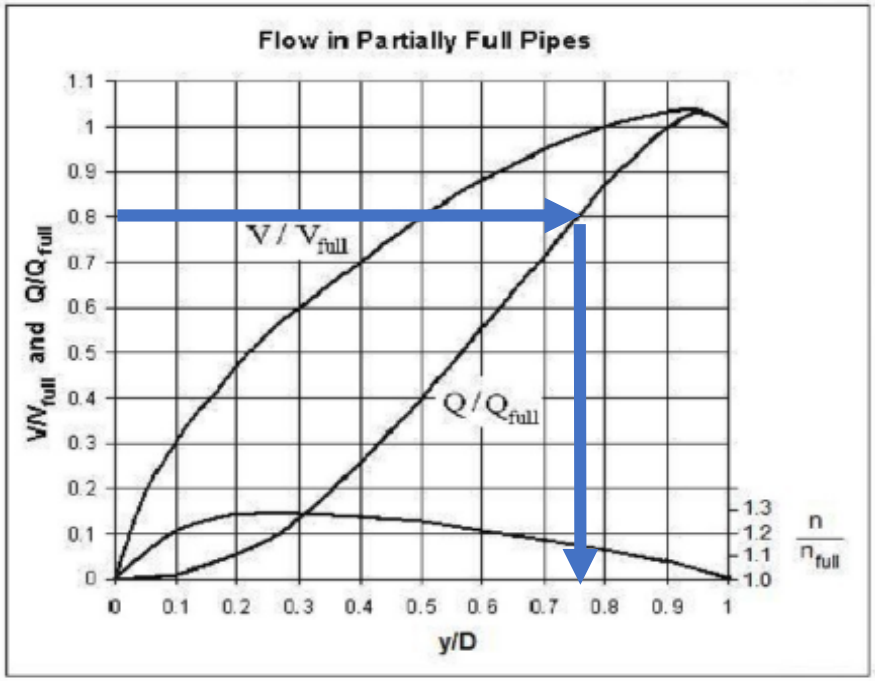


**Figure 1**

# RIP RAP SIZING CALCULATION

## W.D.O.T. FACILITIES DEVELOPMENT MANUAL
## RIPRAP BLANKET DESIGN

| **Given:** | Outfall #2 | |
|---|---|---|
| Storm Sewer Diameter ($D_O$) | 1.25 | feet |
| Discharge ($Q_{10}$) | 9.08 | cfs |
| Discharge full pipe flow (Qfull) | 9.90 | cfs |
| Q/Qfull | 0.92 | |
| Partially full pipe from Figure 1 (y/D) | 0.85 | |
| Tailwater Depth (TW) based on partially full pipe | 1.06 | feet |

**Stone Size:**

| | | |
|---|---|---|
| $d_{50} = D_O(0.020\ (D_O/TW)(Q/D_O^{5/2})^{4/3}) =$ | 0.2648 | feet |
| Use average stone size of: | 4 | inches |

**Length of Stone Protection:**

| | | |
|---|---|---|
| $L_{sp} = D_O(1.7(Q/D_O^{5/2})+8) =$ | 21.05 | feet |
| Use length of: | 22 | feet |

**Width of Stone Protection (at outlet):**

| | | |
|---|---|---|
| $W_{sp} = 3 * D_O$ | 3.75 | feet |
| Use width of: | 4 | feet |

**Width of Stone Protection (at end of blanket):**

| | | |
|---|---|---|
| $W_{sp}$ (max. TW) $= 2(1.5\ D_O + 0.2\ L_{sp})$ | 12.17 | feet |
| Use width of: | 13 | feet |

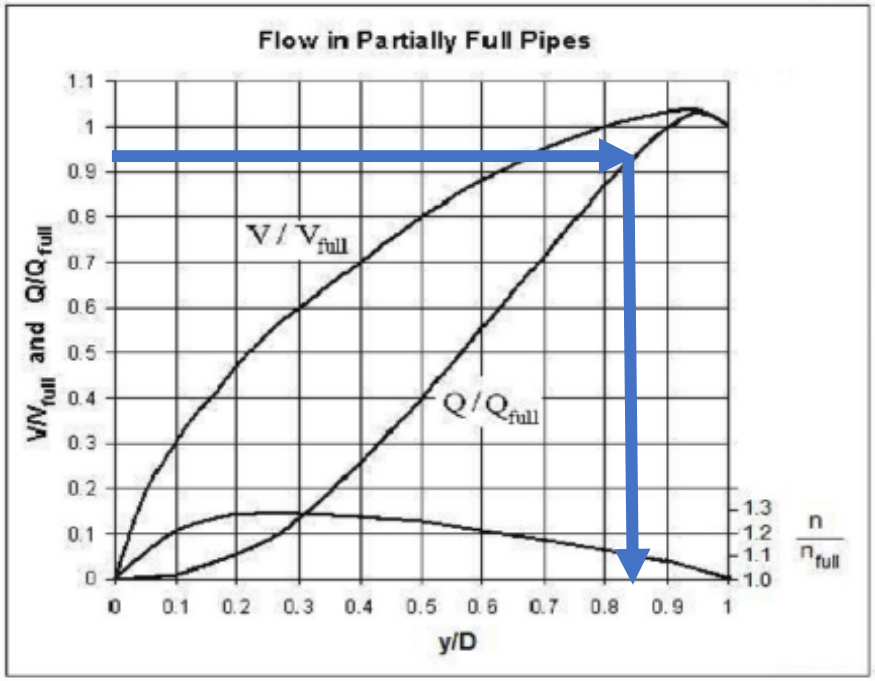


**Figure 1**

# RIP RAP SIZING CALCULATION

## W.D.O.T. FACILITIES DEVELOPMENT MANUAL
## RIPRAP BLANKET DESIGN

| **Given:** | Pond Outfall | |
|---|---|---|
| Storm Sewer Diameter ($D_O$) | 1.25 | feet |
| Discharge ($Q_{10}$) | 5.80 | cfs |
| Discharge full pipe flow (Qfull) | 9.92 | cfs |
| Q/Qfull | 0.58 | |
| Partially full pipe from Figure 1 (y/D) | 0.62 | |
| Tailwater Depth (TW) based on partially full pipe | 0.78 | feet |

**Stone Size:**

| | | |
|---|---|---|
| $d_{50} = D_O(0.020\ (D_O/TW)(Q/D_O^{5/2})^{4/3}) =$ | 0.1997 | feet |
| Use average stone size of: | 3 | inches |

**Length of Stone Protection:**

| | | |
|---|---|---|
| $L_{sp} = D_O(1.7(Q/D_O^{5/2})+8) =$ | 17.06 | feet |
| Use length of: | 18 | feet |

**Width of Stone Protection (at outlet):**

| | | |
|---|---|---|
| $W_{sp} = 3 * D_O$ | 3.75 | feet |
| Use width of: | 4 | feet |

**Width of Stone Protection (at end of blanket):**

| | | |
|---|---|---|
| $W_{sp}$ (max. TW) $= 2(1.5\ D_O + 0.2\ L_{sp})$ | 10.57 | feet |
| Use width of: | 11 | feet |

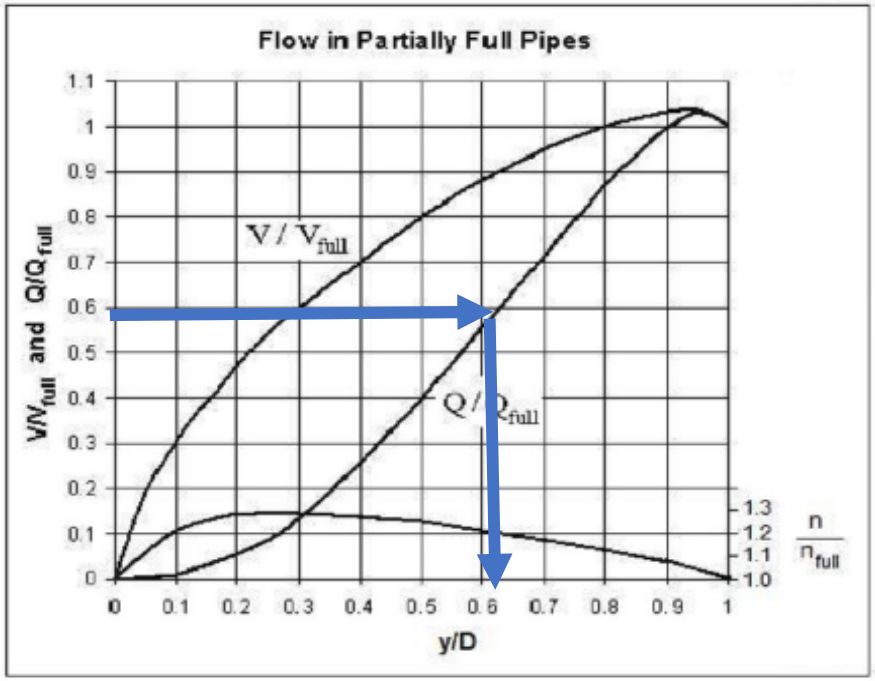


**Figure 1**

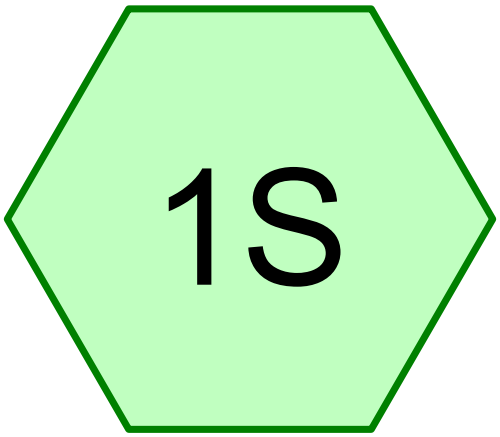


# Existing Area

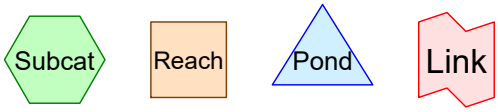


**Routing Diagram for LS04 PRE**
Prepared by Quam Engineering, Printed 2/3/2020
HydroCAD® 10.00-24 s/n 06587 © 2018 HydroCAD Software Solutions LLC

## Area Listing (all nodes)

| Area (acres) | CN | Description (subcatchment-numbers) |
|---|---|---|
| 5.530 | 70 | Cropland, HSG B (1S) |
| **5.530** | **70** | **TOTAL AREA** |

Time span=0.00-240.00 hrs, dt=0.05 hrs, 4801 points
Runoff by SCS TR-20 method, UH=SCS, Weighted-CN
Reach routing by Dyn-Stor-Ind method - Pond routing by Dyn-Stor-Ind method

**Subcatchment 1S: Existing Area** Runoff Area=5.530 ac 0.00% Impervious Runoff Depth=0.44"
Flow Length=500' Slope=0.0100 '/' Tc=9.3 min CN=70 Runoff=3.16 cfs 0.203 af

**Total Runoff Area = 5.530 ac Runoff Volume = 0.203 af Average Runoff Depth = 0.44"**
**100.00% Pervious = 5.530 ac 0.00% Impervious = 0.000 ac**

## Summary for Subcatchment 1S: Existing Area

Runoff = 3.16 cfs @ 12.19 hrs, Volume= 0.203 af, Depth= 0.44"

Runoff by SCS TR-20 method, UH=SCS, Weighted-CN, Time Span= 0.00-240.00 hrs, dt= 0.05 hrs
MSE 24-hr 3 1-Year Rainfall=2.47"

| | Area (ac) | CN | Description |
|---|---|---|---|
| * | 5.530 | 70 | Cropland, HSG B |
| | 5.530 | | 100.00% Pervious Area |

| Tc (min) | Length (feet) | Slope (ft/ft) | Velocity (ft/sec) | Capacity (cfs) | Description |
|---|---|---|---|---|---|
| 9.3 | 500 | 0.0100 | 0.90 | | **Shallow Concentrated Flow, Shallow Flow** Cultivated Straight Rows Kv= 9.0 fps |

Time span=0.00-240.00 hrs, dt=0.05 hrs, 4801 points
Runoff by SCS TR-20 method, UH=SCS, Weighted-CN
Reach routing by Dyn-Stor-Ind method - Pond routing by Dyn-Stor-Ind method

**Subcatchment 1S: Existing Area** Runoff Area=5.530 ac 0.00% Impervious Runoff Depth=0.63"
Flow Length=500' Slope=0.0100 '/' Tc=9.3 min CN=70 Runoff=4.89 cfs 0.291 af

**Total Runoff Area = 5.530 ac Runoff Volume = 0.291 af Average Runoff Depth = 0.63"**
**100.00% Pervious = 5.530 ac 0.00% Impervious = 0.000 ac**

## Summary for Subcatchment 1S: Existing Area

Runoff = 4.89 cfs @ 12.19 hrs, Volume= 0.291 af, Depth= 0.63"

Runoff by SCS TR-20 method, UH=SCS, Weighted-CN, Time Span= 0.00-240.00 hrs, dt= 0.05 hrs
MSE 24-hr 3 2-Year Rainfall=2.85"

| | Area (ac) | CN | Description |
|---|---|---|---|
| * | 5.530 | 70 | Cropland, HSG B |
| | 5.530 | | 100.00% Pervious Area |

| Tc (min) | Length (feet) | Slope (ft/ft) | Velocity (ft/sec) | Capacity (cfs) | Description |
|---|---|---|---|---|---|
| 9.3 | 500 | 0.0100 | 0.90 | | **Shallow Concentrated Flow, Shallow Flow** Cultivated Straight Rows Kv= 9.0 fps |

Time span=0.00-240.00 hrs, dt=0.05 hrs, 4801 points
Runoff by SCS TR-20 method, UH=SCS, Weighted-CN
Reach routing by Dyn-Stor-Ind method - Pond routing by Dyn-Stor-Ind method

**Subcatchment 1S: Existing Area** Runoff Area=5.530 ac 0.00% Impervious Runoff Depth=1.41"
Flow Length=500' Slope=0.0100 '/' Tc=9.3 min CN=70 Runoff=11.85 cfs 0.650 af

**Total Runoff Area = 5.530 ac Runoff Volume = 0.650 af Average Runoff Depth = 1.41"**
**100.00% Pervious = 5.530 ac 0.00% Impervious = 0.000 ac**

## Summary for Subcatchment 1S: Existing Area

Runoff = 11.85 cfs @ 12.18 hrs, Volume= 0.650 af, Depth= 1.41"

Runoff by SCS TR-20 method, UH=SCS, Weighted-CN, Time Span= 0.00-240.00 hrs, dt= 0.05 hrs
MSE 24-hr 3 10-Year Rainfall=4.12"

| | Area (ac) | CN | Description |
|---|---|---|---|
| * | 5.530 | 70 | Cropland, HSG B |
| | 5.530 | | 100.00% Pervious Area |

| Tc (min) | Length (feet) | Slope (ft/ft) | Velocity (ft/sec) | Capacity (cfs) | Description |
|---|---|---|---|---|---|
| 9.3 | 500 | 0.0100 | 0.90 | | **Shallow Concentrated Flow, Shallow Flow** Cultivated Straight Rows Kv= 9.0 fps |

Time span=0.00-240.00 hrs, dt=0.05 hrs, 4801 points
Runoff by SCS TR-20 method, UH=SCS, Weighted-CN
Reach routing by Dyn-Stor-Ind method - Pond routing by Dyn-Stor-Ind method

**Subcatchment 1S: Existing Area** Runoff Area=5.530 ac 0.00% Impervious Runoff Depth=3.25"
Flow Length=500' Slope=0.0100 '/' Tc=9.3 min CN=70 Runoff=28.11 cfs 1.497 af

**Total Runoff Area = 5.530 ac Runoff Volume = 1.497 af Average Runoff Depth = 3.25"**
**100.00% Pervious = 5.530 ac 0.00% Impervious = 0.000 ac**

## Summary for Subcatchment 1S: Existing Area

Runoff = 28.11 cfs @ 12.17 hrs, Volume= 1.497 af, Depth= 3.25"

Runoff by SCS TR-20 method, UH=SCS, Weighted-CN, Time Span= 0.00-240.00 hrs, dt= 0.05 hrs
MSE 24-hr 3 100-Year Rainfall=6.55"

| | Area (ac) | CN | Description |
|---|---|---|---|
| * | 5.530 | 70 | Cropland, HSG B |
| | 5.530 | | 100.00% Pervious Area |

| Tc (min) | Length (feet) | Slope (ft/ft) | Velocity (ft/sec) | Capacity (cfs) | Description |
|---|---|---|---|---|---|
| 9.3 | 500 | 0.0100 | 0.90 | | **Shallow Concentrated Flow, Shallow Flow** Cultivated Straight Rows Kv= 9.0 fps |

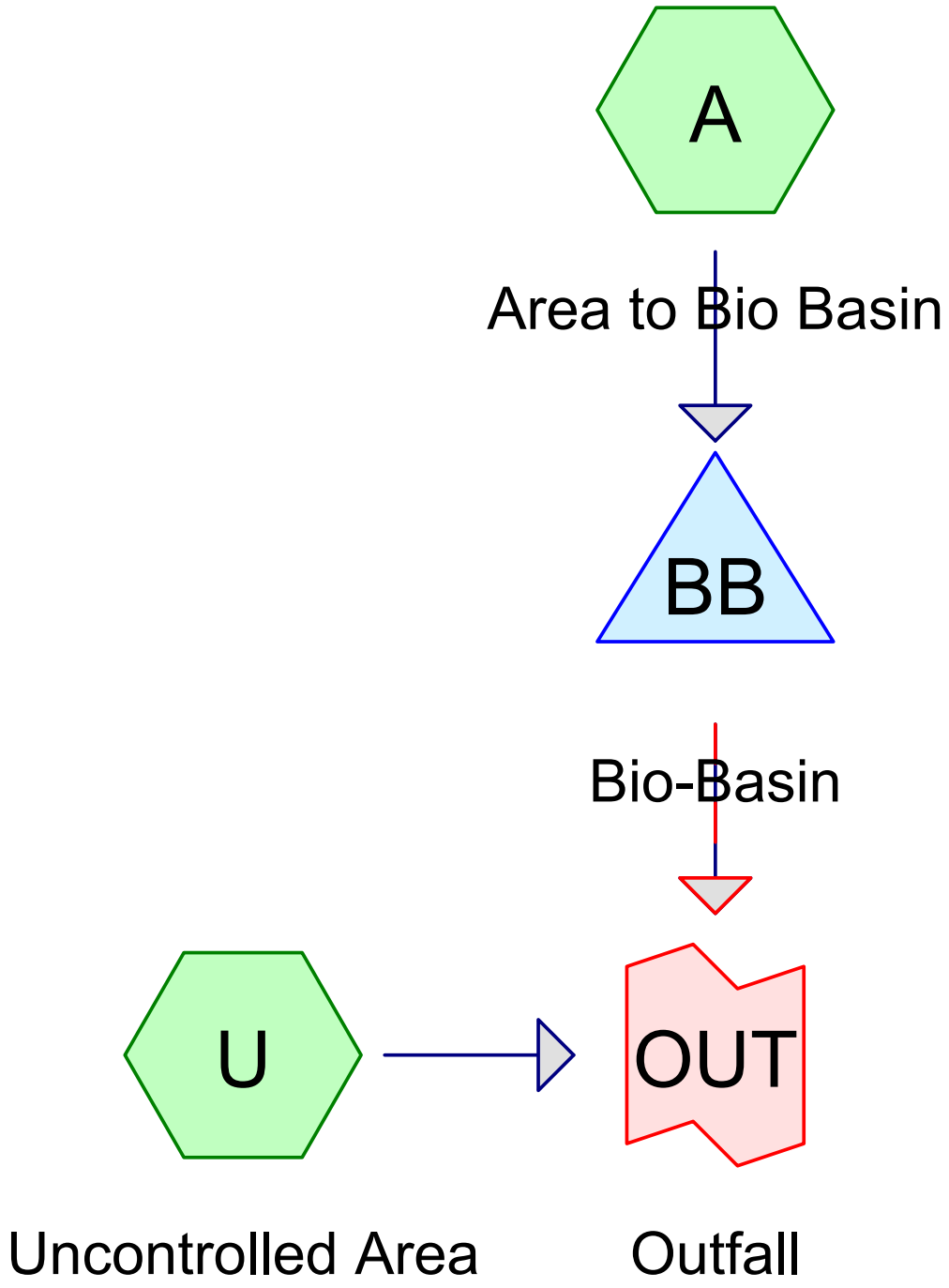


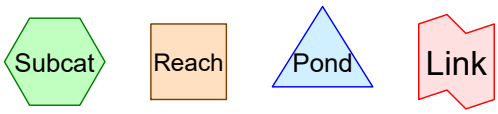


**Routing Diagram for LS04 POST**
Prepared by Quam Engineering, Printed 2/4/2020
HydroCAD® 10.00-24 s/n 06587 © 2018 HydroCAD Software Solutions LLC

## Area Listing (all nodes)

| Area (acres) | CN | Description (subcatchment-numbers) |
|---|---|---|
| 1.680 | 74 | >75% Grass cover, Good, HSG C (A, U) |
| 3.430 | 98 | Impervious Areas (A) |
| 0.190 | 98 | Impervious Roof (U) |
| 0.230 | 100 | Water (A) |
| **5.530** | **91** | **TOTAL AREA** |

Time span=0.00-240.00 hrs, dt=0.05 hrs, 4801 points
Runoff by SCS TR-20 method, UH=SCS, Weighted-CN
Reach routing by Dyn-Stor-Ind method - Pond routing by Dyn-Stor-Ind method

**Subcatchment A: Area to Bio Basin** Runoff Area=3.880 ac 94.33% Impervious Runoff Depth=2.13"
Tc=6.0 min CN=97 Runoff=13.27 cfs 0.690 af

**Subcatchment U: Uncontrolled Area** Runoff Area=1.650 ac 11.52% Impervious Runoff Depth=0.72"
Tc=6.0 min CN=77 Runoff=2.09 cfs 0.099 af

**Pond BB: Bio-Basin** Peak Elev=889.03' Storage=17,325 cf Inflow=13.27 cfs 0.690 af
Discarded=0.25 cfs 0.487 af Primary=0.55 cfs 0.203 af Secondary=0.00 cfs 0.000 af Outflow=0.79 cfs 0.690 af

**Link OUT: Outfall** Inflow=2.13 cfs 0.302 af
Primary=2.13 cfs 0.302 af

**Total Runoff Area = 5.530 ac Runoff Volume = 0.789 af Average Runoff Depth = 1.71"**
**30.38% Pervious = 1.680 ac 69.62% Impervious = 3.850 ac**

## Summary for Subcatchment A: Area to Bio Basin

Runoff = 13.27 cfs @ 12.13 hrs, Volume= 0.690 af, Depth= 2.13"

Runoff by SCS TR-20 method, UH=SCS, Weighted-CN, Time Span= 0.00-240.00 hrs, dt= 0.05 hrs
MSE 24-hr 3 1-Year Rainfall=2.47"

| | Area (ac) | CN | Description |
|---|---|---|---|
| * | 3.430 | 98 | Impervious Areas |
| | 0.220 | 74 | >75% Grass cover, Good, HSG C |
| * | 0.230 | 100 | Water |
| | 3.880 | 97 | Weighted Average |
| | 0.220 | | 5.67% Pervious Area |
| | 3.660 | | 94.33% Impervious Area |

| Tc (min) | Length (feet) | Slope (ft/ft) | Velocity (ft/sec) | Capacity (cfs) | Description |
|---|---|---|---|---|---|
| 6.0 | | | | | **Direct Entry, Small Area** |

## Summary for Subcatchment U: Uncontrolled Area

Runoff = 2.09 cfs @ 12.14 hrs, Volume= 0.099 af, Depth= 0.72"

Runoff by SCS TR-20 method, UH=SCS, Weighted-CN, Time Span= 0.00-240.00 hrs, dt= 0.05 hrs
MSE 24-hr 3 1-Year Rainfall=2.47"

| | Area (ac) | CN | Description |
|---|---|---|---|
| * | 0.190 | 98 | Impervious Roof |
| | 1.460 | 74 | >75% Grass cover, Good, HSG C |
| | 1.650 | 77 | Weighted Average |
| | 1.460 | | 88.48% Pervious Area |
| | 0.190 | | 11.52% Impervious Area |

| Tc (min) | Length (feet) | Slope (ft/ft) | Velocity (ft/sec) | Capacity (cfs) | Description |
|---|---|---|---|---|---|
| 6.0 | | | | | **Direct Entry, Small Area** |

## Summary for Pond BB: Bio-Basin

Inflow Area = 3.880 ac, 94.33% Impervious, Inflow Depth = 2.13" for 1-Year event
Inflow = 13.27 cfs @ 12.13 hrs, Volume= 0.690 af
Outflow = 0.79 cfs @ 13.20 hrs, Volume= 0.690 af, Atten= 94%, Lag= 64.4 min
Discarded = 0.25 cfs @ 10.55 hrs, Volume= 0.487 af
Primary = 0.55 cfs @ 13.20 hrs, Volume= 0.203 af
Secondary = 0.00 cfs @ 0.00 hrs, Volume= 0.000 af

Routing by Dyn-Stor-Ind method, Time Span= 0.00-240.00 hrs, dt= 0.05 hrs
Peak Elev= 889.03' @ 13.20 hrs Surf.Area= 2,950 sf Storage= 17,325 cf

Plug-Flow detention time= (not calculated: outflow precedes inflow)
Center-of-Mass det. time= 372.6 min ( 1,137.2 - 764.5 )

| Volume | Invert | Avail.Storage | Storage Description |
|---|---|---|---|
| #1 | 885.50' | 1,593 cf | **Engineered Soil (Prismatic)**Listed below (Recalc)<br>5,900 cf Overall x 27.0% Voids |
| #2 | 887.50' | 40,499 cf | **Bio Basin (Prismatic)**Listed below (Recalc) -Impervious |
| | | 42,092 cf | Total Available Storage |

| Elevation (feet) | Surf.Area (sq-ft) | Inc.Store (cubic-feet) | Cum.Store (cubic-feet) |
|---|---|---|---|
| 885.50 | 2,950 | 0 | 0 |
| 887.50 | 2,950 | 5,900 | 5,900 |

| Elevation (feet) | Surf.Area (sq-ft) | Inc.Store (cubic-feet) | Cum.Store (cubic-feet) |
|---|---|---|---|
| 887.50 | 9,342 | 0 | 0 |
| 891.00 | 13,800 | 40,499 | 40,499 |

| Device | Routing | Invert | Outlet Devices |
|---|---|---|---|
| #1 | Primary | 885.50' | **15.0" Round HDPE_Round 15"**<br>L= 51.0' RCP, sq.cut end projecting, Ke= 0.500<br>Inlet / Outlet Invert= 885.50' / 883.46' S= 0.0400 '/' Cc= 0.900<br>n= 0.012 Corrugated PP, smooth interior, Flow Area= 1.23 sf |
| #2 | Device 1 | 885.50' | **1.0" Vert. Underdrain** C= 0.600 |
| #3 | Device 1 | 888.50' | **6.0" Vert. Orifice/Grate** C= 0.600 |
| #4 | Device 1 | 889.50' | **36.0" Horiz. 36" Standpipe** C= 0.600<br>Limited to weir flow at low heads |
| #5 | Secondary | 890.50' | **10.0' long x 10.0' breadth Broad-Crested Rectangular Weir**<br>Head (feet) 0.20 0.40 0.60 0.80 1.00 1.20 1.40 1.60<br>Coef. (English) 2.49 2.56 2.70 2.69 2.68 2.69 2.67 2.64 |
| #6 | Discarded | 885.50' | **3.600 in/hr Exfiltration over Surface area** |

**Discarded OutFlow** Max=0.25 cfs @ 10.55 hrs HW=885.56' (Free Discharge)
└─**6=Exfiltration** (Exfiltration Controls 0.25 cfs)

**Primary OutFlow** Max=0.55 cfs @ 13.20 hrs HW=889.03' TW=0.00' (Dynamic Tailwater)
└─**1=HDPE_Round 15"** (Passes 0.55 cfs of 10.06 cfs potential flow)
  ├─**2=Underdrain** (Orifice Controls 0.05 cfs @ 8.99 fps)
  ├─**3=Orifice/Grate** (Orifice Controls 0.50 cfs @ 2.53 fps)
  └─**4=36" Standpipe** ( Controls 0.00 cfs)

**Secondary OutFlow** Max=0.00 cfs @ 0.00 hrs HW=885.50' TW=0.00' (Dynamic Tailwater)
└─**5=Broad-Crested Rectangular Weir** ( Controls 0.00 cfs)

## Summary for Link OUT: Outfall

Inflow Area = 5.530 ac, 69.62% Impervious, Inflow Depth = 0.66" for 1-Year event
Inflow = 2.13 cfs @ 12.14 hrs, Volume= 0.302 af
Primary = 2.13 cfs @ 12.14 hrs, Volume= 0.302 af, Atten= 0%, Lag= 0.0 min

Primary outflow = Inflow, Time Span= 0.00-240.00 hrs, dt= 0.05 hrs

Time span=0.00-240.00 hrs, dt=0.05 hrs, 4801 points
Runoff by SCS TR-20 method, UH=SCS, Weighted-CN
Reach routing by Dyn-Stor-Ind method - Pond routing by Dyn-Stor-Ind method

**Subcatchment A: Area to Bio Basin** Runoff Area=3.880 ac 94.33% Impervious Runoff Depth=2.51"
Tc=6.0 min CN=97 Runoff=15.45 cfs 0.811 af

**Subcatchment U: Uncontrolled Area** Runoff Area=1.650 ac 11.52% Impervious Runoff Depth=0.97"
Tc=6.0 min CN=77 Runoff=2.84 cfs 0.133 af

**Pond BB: Bio-Basin** Peak Elev=889.28' Storage=20,296 cf Inflow=15.45 cfs 0.811 af
Discarded=0.25 cfs 0.514 af Primary=0.74 cfs 0.297 af Secondary=0.00 cfs 0.000 af Outflow=0.99 cfs 0.812 af

**Link OUT: Outfall** Inflow=2.96 cfs 0.430 af
Primary=2.96 cfs 0.430 af

**Total Runoff Area = 5.530 ac Runoff Volume = 0.945 af Average Runoff Depth = 2.05"**
**30.38% Pervious = 1.680 ac 69.62% Impervious = 3.850 ac**

## Summary for Subcatchment A: Area to Bio Basin

Runoff = 15.45 cfs @ 12.13 hrs, Volume= 0.811 af, Depth= 2.51"

Runoff by SCS TR-20 method, UH=SCS, Weighted-CN, Time Span= 0.00-240.00 hrs, dt= 0.05 hrs
MSE 24-hr 3 2-Year Rainfall=2.85"

| | Area (ac) | CN | Description |
|---|---|---|---|
| * | 3.430 | 98 | Impervious Areas |
| | 0.220 | 74 | >75% Grass cover, Good, HSG C |
| * | 0.230 | 100 | Water |
| | 3.880 | 97 | Weighted Average |
| | 0.220 | | 5.67% Pervious Area |
| | 3.660 | | 94.33% Impervious Area |

| Tc (min) | Length (feet) | Slope (ft/ft) | Velocity (ft/sec) | Capacity (cfs) | Description |
|---|---|---|---|---|---|
| 6.0 | | | | | **Direct Entry, Small Area** |

## Summary for Subcatchment U: Uncontrolled Area

Runoff = 2.84 cfs @ 12.14 hrs, Volume= 0.133 af, Depth= 0.97"

Runoff by SCS TR-20 method, UH=SCS, Weighted-CN, Time Span= 0.00-240.00 hrs, dt= 0.05 hrs
MSE 24-hr 3 2-Year Rainfall=2.85"

| | Area (ac) | CN | Description |
|---|---|---|---|
| * | 0.190 | 98 | Impervious Roof |
| | 1.460 | 74 | >75% Grass cover, Good, HSG C |
| | 1.650 | 77 | Weighted Average |
| | 1.460 | | 88.48% Pervious Area |
| | 0.190 | | 11.52% Impervious Area |

| Tc (min) | Length (feet) | Slope (ft/ft) | Velocity (ft/sec) | Capacity (cfs) | Description |
|---|---|---|---|---|---|
| 6.0 | | | | | **Direct Entry, Small Area** |

## Summary for Pond BB: Bio-Basin

Inflow Area = 3.880 ac, 94.33% Impervious, Inflow Depth = 2.51" for 2-Year event
Inflow = 15.45 cfs @ 12.13 hrs, Volume= 0.811 af
Outflow = 0.99 cfs @ 13.11 hrs, Volume= 0.812 af, Atten= 94%, Lag= 59.2 min
Discarded = 0.25 cfs @ 9.75 hrs, Volume= 0.514 af
Primary = 0.74 cfs @ 13.11 hrs, Volume= 0.297 af
Secondary = 0.00 cfs @ 0.00 hrs, Volume= 0.000 af

Routing by Dyn-Stor-Ind method, Time Span= 0.00-240.00 hrs, dt= 0.05 hrs
Peak Elev= 889.28' @ 13.11 hrs Surf.Area= 2,950 sf Storage= 20,296 cf

Plug-Flow detention time= (not calculated: outflow precedes inflow)
Center-of-Mass det. time= 359.4 min ( 1,120.9 - 761.6 )

| Volume | Invert | Avail.Storage | Storage Description |
|---|---|---|---|
| #1 | 885.50' | 1,593 cf | **Engineered Soil (Prismatic)**Listed below (Recalc)<br>5,900 cf Overall x 27.0% Voids |
| #2 | 887.50' | 40,499 cf | **Bio Basin (Prismatic)**Listed below (Recalc) -Impervious |
| | | 42,092 cf | Total Available Storage |

| Elevation (feet) | Surf.Area (sq-ft) | Inc.Store (cubic-feet) | Cum.Store (cubic-feet) |
|---|---|---|---|
| 885.50 | 2,950 | 0 | 0 |
| 887.50 | 2,950 | 5,900 | 5,900 |

| Elevation (feet) | Surf.Area (sq-ft) | Inc.Store (cubic-feet) | Cum.Store (cubic-feet) |
|---|---|---|---|
| 887.50 | 9,342 | 0 | 0 |
| 891.00 | 13,800 | 40,499 | 40,499 |

| Device | Routing | Invert | Outlet Devices |
|---|---|---|---|
| #1 | Primary | 885.50' | **15.0" Round HDPE_Round 15"**<br>L= 51.0' RCP, sq.cut end projecting, Ke= 0.500<br>Inlet / Outlet Invert= 885.50' / 883.46' S= 0.0400 '/' Cc= 0.900<br>n= 0.012 Corrugated PP, smooth interior, Flow Area= 1.23 sf |
| #2 | Device 1 | 885.50' | **1.0" Vert. Underdrain** C= 0.600 |
| #3 | Device 1 | 888.50' | **6.0" Vert. Orifice/Grate** C= 0.600 |
| #4 | Device 1 | 889.50' | **36.0" Horiz. 36" Standpipe** C= 0.600<br>Limited to weir flow at low heads |
| #5 | Secondary | 890.50' | **10.0' long x 10.0' breadth Broad-Crested Rectangular Weir**<br>Head (feet) 0.20 0.40 0.60 0.80 1.00 1.20 1.40 1.60<br>Coef. (English) 2.49 2.56 2.70 2.69 2.68 2.69 2.67 2.64 |
| #6 | Discarded | 885.50' | **3.600 in/hr Exfiltration over Surface area** |

**Discarded OutFlow** Max=0.25 cfs @ 9.75 hrs HW=885.56' (Free Discharge)
└─**6=Exfiltration** (Exfiltration Controls 0.25 cfs)

**Primary OutFlow** Max=0.74 cfs @ 13.11 hrs HW=889.28' TW=0.00' (Dynamic Tailwater)
└─**1=HDPE_Round 15"** (Passes 0.74 cfs of 10.50 cfs potential flow)
  ├─**2=Underdrain** (Orifice Controls 0.05 cfs @ 9.32 fps)
  ├─**3=Orifice/Grate** (Orifice Controls 0.69 cfs @ 3.52 fps)
  └─**4=36" Standpipe** ( Controls 0.00 cfs)

**Secondary OutFlow** Max=0.00 cfs @ 0.00 hrs HW=885.50' TW=0.00' (Dynamic Tailwater)
└─**5=Broad-Crested Rectangular Weir** ( Controls 0.00 cfs)

## Summary for Link OUT: Outfall

Inflow Area = 5.530 ac, 69.62% Impervious, Inflow Depth = 0.93" for 2-Year event
Inflow = 2.96 cfs @ 12.15 hrs, Volume= 0.430 af
Primary = 2.96 cfs @ 12.15 hrs, Volume= 0.430 af, Atten= 0%, Lag= 0.0 min

Primary outflow = Inflow, Time Span= 0.00-240.00 hrs, dt= 0.05 hrs

Time span=0.00-240.00 hrs, dt=0.05 hrs, 4801 points
Runoff by SCS TR-20 method, UH=SCS, Weighted-CN
Reach routing by Dyn-Stor-Ind method - Pond routing by Dyn-Stor-Ind method

**Subcatchment A: Area to Bio Basin** Runoff Area=3.880 ac 94.33% Impervious Runoff Depth=3.77"
Tc=6.0 min CN=97 Runoff=22.68 cfs 1.219 af

**Subcatchment U: Uncontrolled Area** Runoff Area=1.650 ac 11.52% Impervious Runoff Depth=1.91"
Tc=6.0 min CN=77 Runoff=5.65 cfs 0.262 af

**Pond BB: Bio-Basin** Peak Elev=889.79' Storage=26,330 cf Inflow=22.68 cfs 1.219 af
Discarded=0.25 cfs 0.574 af Primary=5.84 cfs 0.645 af Secondary=0.00 cfs 0.000 af Outflow=6.08 cfs 1.219 af

**Link OUT: Outfall** Inflow=7.69 cfs 0.907 af
Primary=7.69 cfs 0.907 af

**Total Runoff Area = 5.530 ac Runoff Volume = 1.481 af Average Runoff Depth = 3.21"**
**30.38% Pervious = 1.680 ac 69.62% Impervious = 3.850 ac**

## Summary for Subcatchment A: Area to Bio Basin

Runoff = 22.68 cfs @ 12.13 hrs, Volume= 1.219 af, Depth= 3.77"

Runoff by SCS TR-20 method, UH=SCS, Weighted-CN, Time Span= 0.00-240.00 hrs, dt= 0.05 hrs
MSE 24-hr 3 10-Year Rainfall=4.12"

| | Area (ac) | CN | Description |
|---|---|---|---|
| * | 3.430 | 98 | Impervious Areas |
| | 0.220 | 74 | >75% Grass cover, Good, HSG C |
| * | 0.230 | 100 | Water |
| | 3.880 | 97 | Weighted Average |
| | 0.220 | | 5.67% Pervious Area |
| | 3.660 | | 94.33% Impervious Area |

| Tc (min) | Length (feet) | Slope (ft/ft) | Velocity (ft/sec) | Capacity (cfs) | Description |
|---|---|---|---|---|---|
| 6.0 | | | | | **Direct Entry, Small Area** |

## Summary for Subcatchment U: Uncontrolled Area

Runoff = 5.65 cfs @ 12.14 hrs, Volume= 0.262 af, Depth= 1.91"

Runoff by SCS TR-20 method, UH=SCS, Weighted-CN, Time Span= 0.00-240.00 hrs, dt= 0.05 hrs
MSE 24-hr 3 10-Year Rainfall=4.12"

| | Area (ac) | CN | Description |
|---|---|---|---|
| * | 0.190 | 98 | Impervious Roof |
| | 1.460 | 74 | >75% Grass cover, Good, HSG C |
| | 1.650 | 77 | Weighted Average |
| | 1.460 | | 88.48% Pervious Area |
| | 0.190 | | 11.52% Impervious Area |

| Tc (min) | Length (feet) | Slope (ft/ft) | Velocity (ft/sec) | Capacity (cfs) | Description |
|---|---|---|---|---|---|
| 6.0 | | | | | **Direct Entry, Small Area** |

## Summary for Pond BB: Bio-Basin

Inflow Area = 3.880 ac, 94.33% Impervious, Inflow Depth = 3.77" for 10-Year event
Inflow = 22.68 cfs @ 12.13 hrs, Volume= 1.219 af
Outflow = 6.08 cfs @ 12.33 hrs, Volume= 1.219 af, Atten= 73%, Lag= 12.3 min
Discarded = 0.25 cfs @ 9.15 hrs, Volume= 0.574 af
Primary = 5.84 cfs @ 12.33 hrs, Volume= 0.645 af
Secondary = 0.00 cfs @ 0.00 hrs, Volume= 0.000 af

Routing by Dyn-Stor-Ind method, Time Span= 0.00-240.00 hrs, dt= 0.05 hrs
Peak Elev= 889.79' @ 12.33 hrs Surf.Area= 2,950 sf Storage= 26,330 cf

Plug-Flow detention time= (not calculated: outflow precedes inflow)
Center-of-Mass det. time= 290.2 min ( 1,044.9 - 754.6 )

| Volume | Invert | Avail.Storage | Storage Description |
|---|---|---|---|
| #1 | 885.50' | 1,593 cf | **Engineered Soil (Prismatic)**Listed below (Recalc)<br>5,900 cf Overall x 27.0% Voids |
| #2 | 887.50' | 40,499 cf | **Bio Basin (Prismatic)**Listed below (Recalc) -Impervious |
| | | 42,092 cf | Total Available Storage |

| Elevation (feet) | Surf.Area (sq-ft) | Inc.Store (cubic-feet) | Cum.Store (cubic-feet) |
|---|---|---|---|
| 885.50 | 2,950 | 0 | 0 |
| 887.50 | 2,950 | 5,900 | 5,900 |

| Elevation (feet) | Surf.Area (sq-ft) | Inc.Store (cubic-feet) | Cum.Store (cubic-feet) |
|---|---|---|---|
| 887.50 | 9,342 | 0 | 0 |
| 891.00 | 13,800 | 40,499 | 40,499 |

| Device | Routing | Invert | Outlet Devices |
|---|---|---|---|
| #1 | Primary | 885.50' | **15.0" Round HDPE_Round 15"**<br>L= 51.0' RCP, sq.cut end projecting, Ke= 0.500<br>Inlet / Outlet Invert= 885.50' / 883.46' S= 0.0400 '/' Cc= 0.900<br>n= 0.012 Corrugated PP, smooth interior, Flow Area= 1.23 sf |
| #2 | Device 1 | 885.50' | **1.0" Vert. Underdrain** C= 0.600 |
| #3 | Device 1 | 888.50' | **6.0" Vert. Orifice/Grate** C= 0.600 |
| #4 | Device 1 | 889.50' | **36.0" Horiz. 36" Standpipe** C= 0.600<br>Limited to weir flow at low heads |
| #5 | Secondary | 890.50' | **10.0' long x 10.0' breadth Broad-Crested Rectangular Weir**<br>Head (feet) 0.20 0.40 0.60 0.80 1.00 1.20 1.40 1.60<br>Coef. (English) 2.49 2.56 2.70 2.69 2.68 2.69 2.67 2.64 |
| #6 | Discarded | 885.50' | **3.600 in/hr Exfiltration over Surface area** |

**Discarded OutFlow** Max=0.25 cfs @ 9.15 hrs HW=885.56' (Free Discharge)
└─**6=Exfiltration** (Exfiltration Controls 0.25 cfs)

**Primary OutFlow** Max=5.80 cfs @ 12.33 hrs HW=889.79' TW=0.00' (Dynamic Tailwater)
└─**1=HDPE_Round 15"** (Passes 5.80 cfs of 11.31 cfs potential flow)
  ├─**2=Underdrain** (Orifice Controls 0.05 cfs @ 9.92 fps)
  ├─**3=Orifice/Grate** (Orifice Controls 0.96 cfs @ 4.91 fps)
  └─**4=36" Standpipe** (Weir Controls 4.78 cfs @ 1.76 fps)

**Secondary OutFlow** Max=0.00 cfs @ 0.00 hrs HW=885.50' TW=0.00' (Dynamic Tailwater)
└─**5=Broad-Crested Rectangular Weir** ( Controls 0.00 cfs)

## Summary for Link OUT: Outfall

Inflow Area = 5.530 ac, 69.62% Impervious, Inflow Depth = 1.97" for 10-Year event
Inflow = 7.69 cfs @ 12.30 hrs, Volume= 0.907 af
Primary = 7.69 cfs @ 12.30 hrs, Volume= 0.907 af, Atten= 0%, Lag= 0.0 min

Primary outflow = Inflow, Time Span= 0.00-240.00 hrs, dt= 0.05 hrs

Time span=0.00-240.00 hrs, dt=0.05 hrs, 4801 points
Runoff by SCS TR-20 method, UH=SCS, Weighted-CN
Reach routing by Dyn-Stor-Ind method - Pond routing by Dyn-Stor-Ind method

**Subcatchment A: Area to Bio Basin** Runoff Area=3.880 ac 94.33% Impervious Runoff Depth=6.19"
Tc=6.0 min CN=97 Runoff=36.41 cfs 2.002 af

**Subcatchment U: Uncontrolled Area** Runoff Area=1.650 ac 11.52% Impervious Runoff Depth=3.96"
Tc=6.0 min CN=77 Runoff=11.55 cfs 0.545 af

**Pond BB: Bio-Basin** Peak Elev=890.67' Storage=37,633 cf Inflow=36.41 cfs 2.002 af
Discarded=0.25 cfs 0.640 af Primary=12.60 cfs 1.343 af Secondary=1.77 cfs 0.020 af Outflow=14.61 cfs 2.003 af

**Link OUT: Outfall** Inflow=23.55 cfs 1.908 af
Primary=23.55 cfs 1.908 af

**Total Runoff Area = 5.530 ac Runoff Volume = 2.547 af Average Runoff Depth = 5.53"**
**30.38% Pervious = 1.680 ac 69.62% Impervious = 3.850 ac**

## Summary for Subcatchment A: Area to Bio Basin

Runoff = 36.41 cfs @ 12.13 hrs, Volume= 2.002 af, Depth= 6.19"

Runoff by SCS TR-20 method, UH=SCS, Weighted-CN, Time Span= 0.00-240.00 hrs, dt= 0.05 hrs
MSE 24-hr 3 100-Year Rainfall=6.55"

| | Area (ac) | CN | Description |
|---|---|---|---|
| * | 3.430 | 98 | Impervious Areas |
| | 0.220 | 74 | >75% Grass cover, Good, HSG C |
| * | 0.230 | 100 | Water |
| | 3.880 | 97 | Weighted Average |
| | 0.220 | | 5.67% Pervious Area |
| | 3.660 | | 94.33% Impervious Area |

| Tc (min) | Length (feet) | Slope (ft/ft) | Velocity (ft/sec) | Capacity (cfs) | Description |
|---|---|---|---|---|---|
| 6.0 | | | | | **Direct Entry, Small Area** |

## Summary for Subcatchment U: Uncontrolled Area

Runoff = 11.55 cfs @ 12.13 hrs, Volume= 0.545 af, Depth= 3.96"

Runoff by SCS TR-20 method, UH=SCS, Weighted-CN, Time Span= 0.00-240.00 hrs, dt= 0.05 hrs
MSE 24-hr 3 100-Year Rainfall=6.55"

| | Area (ac) | CN | Description |
|---|---|---|---|
| * | 0.190 | 98 | Impervious Roof |
| | 1.460 | 74 | >75% Grass cover, Good, HSG C |
| | 1.650 | 77 | Weighted Average |
| | 1.460 | | 88.48% Pervious Area |
| | 0.190 | | 11.52% Impervious Area |

| Tc (min) | Length (feet) | Slope (ft/ft) | Velocity (ft/sec) | Capacity (cfs) | Description |
|---|---|---|---|---|---|
| 6.0 | | | | | **Direct Entry, Small Area** |

## Summary for Pond BB: Bio-Basin

Inflow Area = 3.880 ac, 94.33% Impervious, Inflow Depth = 6.19" for 100-Year event
Inflow = 36.41 cfs @ 12.13 hrs, Volume= 2.002 af
Outflow = 14.61 cfs @ 12.26 hrs, Volume= 2.003 af, Atten= 60%, Lag= 8.1 min
Discarded = 0.25 cfs @ 6.45 hrs, Volume= 0.640 af
Primary = 12.60 cfs @ 12.26 hrs, Volume= 1.343 af
Secondary = 1.77 cfs @ 12.26 hrs, Volume= 0.020 af

Routing by Dyn-Stor-Ind method, Time Span= 0.00-240.00 hrs, dt= 0.05 hrs
Peak Elev= 890.67' @ 12.26 hrs Surf.Area= 2,950 sf Storage= 37,633 cf

Plug-Flow detention time= (not calculated: outflow precedes inflow)
Center-of-Mass det. time= 211.3 min ( 958.5 - 747.2 )

| Volume | Invert | Avail.Storage | Storage Description |
|---|---|---|---|
| #1 | 885.50' | 1,593 cf | **Engineered Soil (Prismatic)**Listed below (Recalc)<br>5,900 cf Overall x 27.0% Voids |
| #2 | 887.50' | 40,499 cf | **Bio Basin (Prismatic)**Listed below (Recalc) -Impervious |
| | | 42,092 cf | Total Available Storage |

| Elevation (feet) | Surf.Area (sq-ft) | Inc.Store (cubic-feet) | Cum.Store (cubic-feet) |
|---|---|---|---|
| 885.50 | 2,950 | 0 | 0 |
| 887.50 | 2,950 | 5,900 | 5,900 |

| Elevation (feet) | Surf.Area (sq-ft) | Inc.Store (cubic-feet) | Cum.Store (cubic-feet) |
|---|---|---|---|
| 887.50 | 9,342 | 0 | 0 |
| 891.00 | 13,800 | 40,499 | 40,499 |

| Device | Routing | Invert | Outlet Devices |
|---|---|---|---|
| #1 | Primary | 885.50' | **15.0" Round HDPE_Round 15"**<br>L= 51.0' RCP, sq.cut end projecting, Ke= 0.500<br>Inlet / Outlet Invert= 885.50' / 883.46' S= 0.0400 '/' Cc= 0.900<br>n= 0.012 Corrugated PP, smooth interior, Flow Area= 1.23 sf |
| #2 | Device 1 | 885.50' | **1.0" Vert. Underdrain** C= 0.600 |
| #3 | Device 1 | 888.50' | **6.0" Vert. Orifice/Grate** C= 0.600 |
| #4 | Device 1 | 889.50' | **36.0" Horiz. 36" Standpipe** C= 0.600<br>Limited to weir flow at low heads |
| #5 | Secondary | 890.50' | **10.0' long x 10.0' breadth Broad-Crested Rectangular Weir**<br>Head (feet) 0.20 0.40 0.60 0.80 1.00 1.20 1.40 1.60<br>Coef. (English) 2.49 2.56 2.70 2.69 2.68 2.69 2.67 2.64 |
| #6 | Discarded | 885.50' | **3.600 in/hr Exfiltration over Surface area** |

**Discarded OutFlow** Max=0.25 cfs @ 6.45 hrs HW=885.56' (Free Discharge)
└─**6=Exfiltration** (Exfiltration Controls 0.25 cfs)

**Primary OutFlow** Max=12.59 cfs @ 12.26 hrs HW=890.66' TW=0.00' (Dynamic Tailwater)
└─**1=HDPE_Round 15"** (Inlet Controls 12.59 cfs @ 10.26 fps)
  ├─**2=Underdrain** (Passes < 0.06 cfs potential flow)
  ├─**3=Orifice/Grate** (Passes < 1.31 cfs potential flow)
  └─**4=36" Standpipe** (Passes < 36.73 cfs potential flow)

**Secondary OutFlow** Max=1.66 cfs @ 12.26 hrs HW=890.66' TW=0.00' (Dynamic Tailwater)
└─**5=Broad-Crested Rectangular Weir** (Weir Controls 1.66 cfs @ 1.01 fps)

## Summary for Link OUT: Outfall

Inflow Area = 5.530 ac, 69.62% Impervious, Inflow Depth = 4.14" for 100-Year event
Inflow = 23.55 cfs @ 12.14 hrs, Volume= 1.908 af
Primary = 23.55 cfs @ 12.14 hrs, Volume= 1.908 af, Atten= 0%, Lag= 0.0 min

Primary outflow = Inflow, Time Span= 0.00-240.00 hrs, dt= 0.05 hrs

## INFILTRATION & SEDIMENT CONTROL CALCULATIONS

**Infiltration:**

The following calculations using the WinSLAMM output indicates that the proposed development will infiltrate greater than 60% of the pre-development infiltration volume for the site area suitable for infiltration.

**Pre-development Infiltration results:**

| Development | Area (Acres) | SLAMM Soil Type | Average Annual Rainfall Volume (cuft) | Pre-Development Runoff Volume (cuft) | Pre-Development Infiltration Volume (cuft) |
|---|---|---|---|---|---|
| Non-Residential | 5.530 | Silty | 578,329[1] | 21,355 | 556,974 |

**1**: Total Rainfall x Drainage Area = Avg. Annual Rainfall Volume
28.81 in (1 ft/12 in) x 5.530 acres (43,560 sq ft/ 1 acre) = 578,329 cuft

Minimum required post-development infiltration volume: 556,974 cuft x 0.60 = **334,184 cuft**

**Post-Development Infiltration results:**

| Description | Area (Acres) | SLAMM Soil Type | Average Annual Rainfall Volume (cuft) | Post-Development Runoff Volume (cuft) | Post-Development Infiltration Volume (cuft) |
|---|---|---|---|---|---|
| Non-Residential | 5.530 | Silty | 578,329[1] | 77,515 | **500,814** |

**Infiltration Summary**
500,814 cu ft (Post-Development) > 334,184 cu ft (60% Pre-Development)

**Sediment Control:**

The following calculations using the WinSLAMM output indicates that the proposed development will remove 80% of total suspended solids (TSS).

## WinSLAMM Model Summary:

Pre-Development:

Pre-Development Areas a...

| | Description | Area (ac) | CN |
|---|---|---|---|
| 1 | Open Ag, HSG B | 5.530 | 70 |
| 2 | | 0.000 | 0 |
| 3 | | 0.000 | 0 |
| 4 | | 0.000 | 0 |
| 5 | | 0.000 | 0 |
| 6 | | 0.000 | 0 |
| | Total Area (ac) | 5.530 | |
| | Composite CN | | 70 |

Total Model Area (ac): 5.530

Clear Cancel Continue

| Rain Number | Start Date | Rain Total (in) | Outfall Total (cf) | Rv | Total Losses (in.) | Calculated CN* | Event Peak Flow (cfs) | Pre-Dev Runoff Vol. |
|---|---|---|---|---|---|---|---|---|
| Minimum: | | 0.00 | 0 | 0.002 | 0.01 | 72.3 | 0.000 | 0.0 |
| Maximum: | | 2.59 | 23533 | 0.453 | 1.53 | 99.6 | 1.700 | 10015.0 |
| Average: | | 0.26 | 711.1 | 0.035 | 0.23 | 83.4 | 0.715 | 237.3 |
| Total: | | 28.81 | 77515 | | 25.02 | | | 21355.00 |

# INFILTRATION & SEDIMENT CONTROL CALCULATIONS

Post-Development

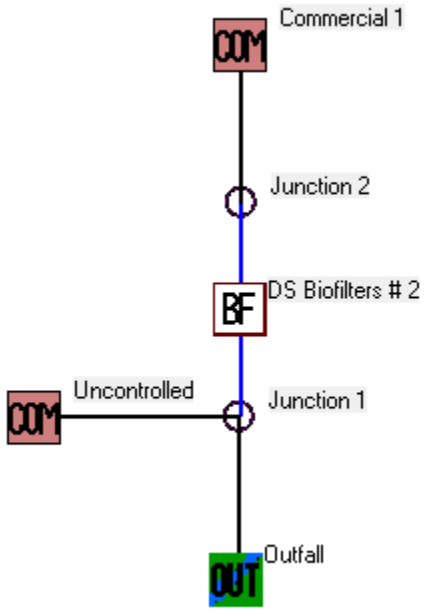


**Land Use:**
Area to BioBasin

| Source Area # | Source Area | Area (acres) | Source Area Parameters | First Control Practice | Second Control Practice |
|---|---|---|---|---|---|
| | **Roofs** | 1.520 | | | |
| 1 | Roofs 1 | 1.520 | Entered | -- | -- |
| | **Parking** | 1.910 | | | |
| 13 | Paved Parking 1 | 1.910 | Entered | -- | -- |
| | **Driveways/Sidewalks** | 0.000 | | | |
| | **Streets** | 0.000 | | | |
| | **Landscaped Areas** | 0.220 | | | |
| 45 | Large Landscaped Areas 1 | 0.220 | Entered | -- | -- |
| | **Other Areas** | 0.230 | | | |
| 70 | Water Body Areas | 0.230 | Entered | -- | -- |

**Land Use:**
Uncontrolled

| Source Area # | Source Area | Area (acres) | Source Area Parameters | First Control Practice | Second Control Practice |
|---|---|---|---|---|---|
| | **Roofs** | 0.190 | | | |
| 1 | Roofs 1 | 0.190 | Entered | -- | -- |
| | **Parking** | 0.000 | | | |
| | **Driveways/Sidewalks** | 0.000 | | | |
| | **Streets** | 0.000 | | | |
| | **Landscaped Areas** | 1.460 | | | |
| 57 | Undeveloped Areas 1 | 1.460 | Entered | -- | -- |
| | **Other Areas** | 0.000 | | | |

| Land Use # | Land Use Type | Land Use Label | Land Use Area (acres) |
|---|---|---|---|
| 1 | Commercial | Area to BioBasin | 3.880 |
| **2** | **Commercial** | **Uncontrolled** | **1.650** |

# INFILTRATION & SEDIMENT CONTROL CALCULATIONS

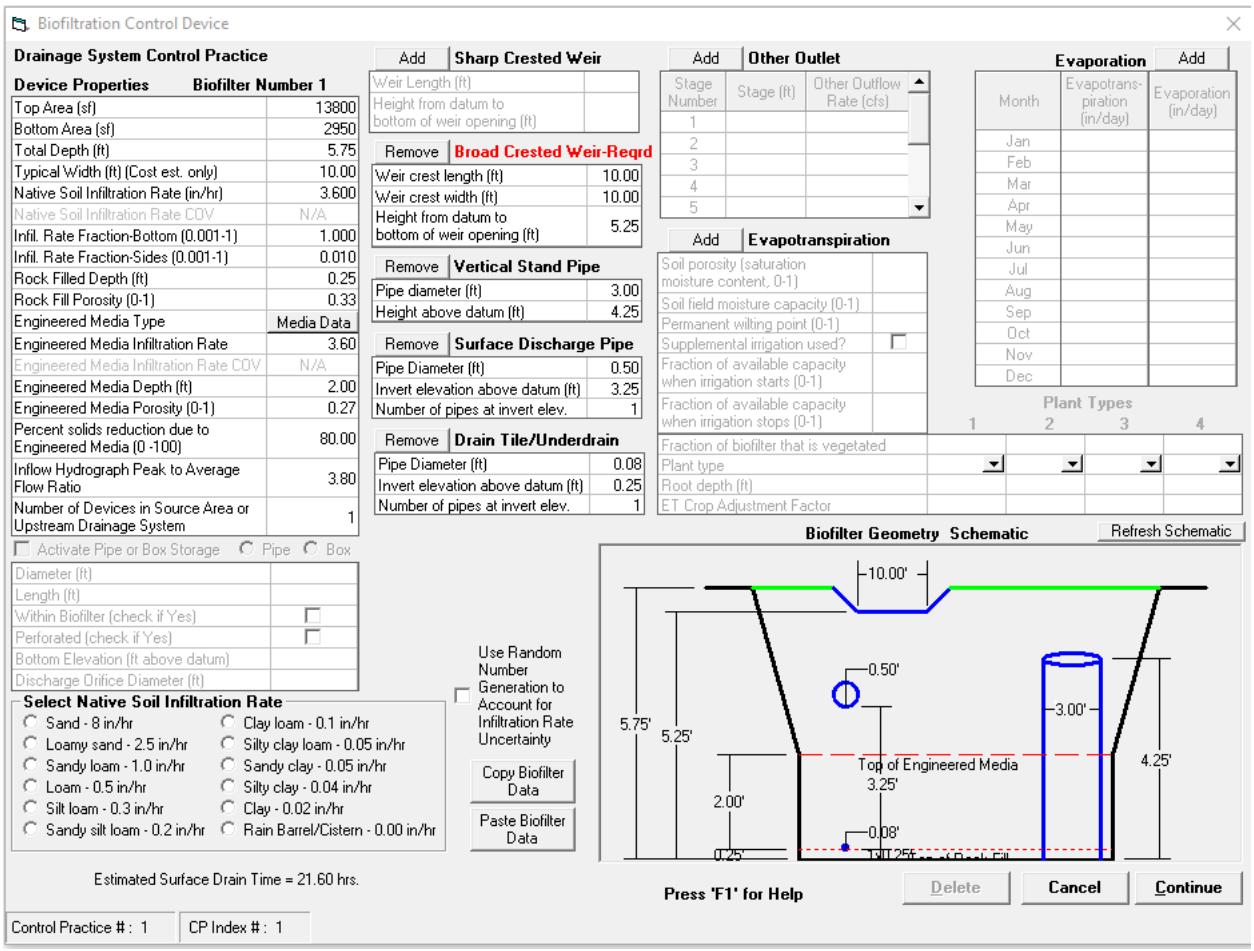

# INFILTRATION & SEDIMENT CONTROL CALCULATIONS

**WinSLAMM Output Summary:**

File Name:

Q:\Projects\LS-04-19_MH\Stormwater\Models\WinSLAMM (01-28-2020).mdb

## Outfall Output Summary

| | Runoff Volume (cu. ft.) | Percent Runoff Reduction | Runoff Coefficient (Rv) | Particulate Solids Conc. (mg/L) | Particulate Solids Yield (lbs) | Percent Particulate Solids Reduction |
|---|---|---|---|---|---|---|
| Total of All Land Uses without Controls | 346133 | | 0.54 | 71.74 | 1550 | |
| Outfall Total with Controls | 77515 | 77.61 % | 0.12 | 59.21 | 286.5 | 81.52 % |
| Current File Output: Annualized Total After Outfall Controls | 77728 | Years in Model Run: | 1.00 | | 287.3 | |

Print Output Summary to Text File

Print Output Summary to .csv File

Total Area Modeled (ac) 5.530

## Total Control Practice Costs

| | |
|---|---|
| Capital Cost | N/A |
| Land Cost | N/A |
| Annual Maintenance Cost | N/A |
| Present Value of All Costs | N/A |
| Annualized Value of All Costs | N/A |

Perform Outfall Flow Duration Curve Calculations

## Receiving Water Impacts Due To Stormwater Runoff

(CWP Impervious Cover Model)

| | Calculated Rv | Approximate Urban Stream Classification |
|---|---|---|
| Without Controls | 0.54 | Poor |
| With Controls | 0.12 | Good |

# INFILTRATION & SEDIMENT CONTROL CALCULATIONS

**WinSLAMM Input Data:**

Data file name: Q:\Projects\LS-04-19_MH\Stormwater\Models\WinSLAMM (01-28-2020).mdb
WinSLAMM Version 10.4.0
Rain file name: C:\WinSLAMM Files\Rain Files\WisReg - Madison WI 1981.RAN
Particulate Solids Concentration file name: C:\WinSLAMM Files\v10.1 WI_AVG01.pscx
Runoff Coefficient file name: C:\WinSLAMM Files\WI_SL06 Dec06.rsvx
Residential Street Delivery file name: C:\WinSLAMM Files\WI_Res and Other Urban Dec06.std
Institutional Street Delivery file name: C:\WinSLAMM Files\WI_Com Inst Indust Dec06.std
Commercial Street Delivery file name: C:\WinSLAMM Files\WI_Com Inst Indust Dec06.std
Industrial Street Delivery file name: C:\WinSLAMM Files\WI_Com Inst Indust Dec06.std
Other Urban Street Delivery file name: C:\WinSLAMM Files\WI_Res and Other Urban Dec06.std
Freeway Street Delivery file name: C:\WinSLAMM Files\Freeway Dec06.std
Apply Street Delivery Files to Adjust the After Event Load Street Dirt Mass Balance: False
Pollutant Relative Concentration file name: C:\WinSLAMM Files\WI_GEO03.ppdx
Source Area PSD and Peak to Average Flow Ratio File: C:\WinSLAMM Files\NURP Source Area PSD Files.csv
Cost Data file name:
If Other Device Pollutant Load Reduction Values = 1, Off-site Pollutant Loads are Removed from Pollutant Load % Reduction calculations
Seed for random number generator: -42
Study period starting date: 01/01/81 Study period ending date: 12/31/81
Start of Winter Season: 12/02 End of Winter Season: 03/12
Date: 01-31-2020 Time: 12:09:34
Site information:

| Pre-Development Area Description | Pre-Development Area (ac) | Pre-Development CN |
|---|---|---|
| Open Ag, HSG B | 5.530 | 70 |
| Total Area (ac)/Composite CN | 5.530 | 70 |

LU# 1 - Commercial: Area to BioBasin Total area (ac): 3.880
1 - Roofs 1: 1.520 ac. Pitched Connected Source Area PSD File: C:\WinSLAMM Files\NURP.cpz
13 - Paved Parking 1: 1.910 ac. Connected Source Area PSD File: C:\WinSLAMM Files\NURP.cpz
45 - Large Landscaped Areas 1: 0.220 ac. Normal Clayey Medium/High Density Alleys Source Area PSD File: C:\WinSLAMM Files\NURP.cpz
70 - Water Body Areas: 0.230 ac. Source Area PSD File:

LU# 2 - Commercial: Uncontrolled Total area (ac): 1.650
1 - Roofs 1: 0.190 ac. Pitched Connected Source Area PSD File: C:\WinSLAMM Files\NURP.cpz
57 - Undeveloped Areas 1: 1.460 ac. Normal Clayey Medium/High Density No Alleys Source Area PSD File: C:\WinSLAMM Files\NURP.cpz

# INFILTRATION & SEDIMENT CONTROL CALCULATIONS

Control Practice 1: Biofilter CP# 1 (DS) - DS Biofilters # 2

1. Top area (square feet) = 13800
2. Bottom aea (square feet) = 2950
3. Depth (ft): 5.75
4. Biofilter width (ft) - for Cost Purposes Only: 10
5. Infiltration rate (in/hr) = 3.6
6. Random infiltration rate generation? No
7. Infiltration rate fraction (side): 0.01
8. Infiltration rate fraction (bottom): 1
9. Depth of biofilter that is rock filled (ft) 0.25
10. Porosity of rock filled volume = 0.33
11. Engineered soil infiltration rate: 3.6
12. Engineered soil depth (ft) = 2
13. Engineered soil porosity = 0.27
14. Percent solids reduction due to flow through engineered soil = 80
15. Biofilter peak to average flow ratio = 3.8
16. Number of biofiltration control devices = 1
17. Particle size distribution file: Not needed - calculated by program
18. Initial water surface elevation (ft): 0

Soil Data Soil Type Fraction in Eng. Soil

User-Defined Soil Type 1.000

Biofilter Outlet/Discharge Characteristics:

Outlet type: Broad Crested Weir

1. Weir crest length (ft): 10
2. Weir crest width (ft): 10
3. Height of datum to bottom of weir opening: 5.25

Outlet type: Vertical Stand Pipe

1. Stand pipe diameter (ft): 3
2. Stand pipe height above datum (ft): 4.25

Outlet type: Surface Discharge Pipe

1. Surface discharge pipe outlet diameter (ft): 0.5
2. Pipe invert elevation above datum (ft): 3.25
3. Number of surface pipe outlets: 1

Outlet type: Drain Tile/Underdrain

1. Underdrain outlet diameter (ft): 0.08
2. Invert elevation above datum (ft): 0.25
3. Number of underdrain outlets: 1

# Ditch Velocity Worksheet

**PROJECT:** Arthur Drive Mini-Warehouses - City of Milton
**FILE NUMBER:** LS-04-20
**LOCATION:** South side of site

Enter the channel characteristics (see Diagram 1):

| | | |
|---|---|---|
| Channel Slope (S): | 0.008 | feet/feet |
| 10-Year Design Flow (Q): | 15.18 | CFS |
| 100-Year Design Flow (Q): | 31.58 | CFS |
| Bottom Width (W): | 4.0 | feet |
| Avg. Side Slope (X): | 4 | horiz./vert. |
| Min. Depth of Channel (Y): | 2 | feet |
| Retardance Class: | D | |
| Manning's Number (N): | 0.03 | |

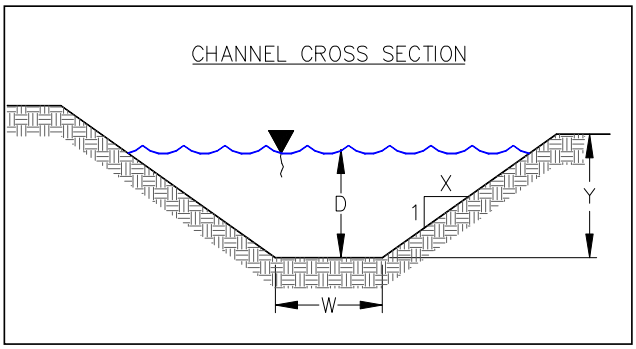


**Diagram 1**

The channel will behave as follows:

| | 10-Year | 100-Year |
|---|---|---|
| **Hydraulic Radius (R):** | **0.52 ft** | **0.70 ft** |
| **Depth (D):** | **0.75 ft** | **1.08 ft** |
| **Velocity (V):** | **2.87 ft/s** | **3.50 ft/s** |

**Shear Stress:** **0.38 psf**

**10-Year Peak Flow Rate:**

Using the Rational Method:

$Q_{10}$ =CIA= 0.15 4.28 23.6 = 15.18 cfs

C = 0.15 Agriculture, HSG B, slopes 2-6%
I = 4.28 in/hr per City of **Milton** rainfall intensity for Time of Concentration = 15 min
A = 23.6 acres;

**100-Year Peak Flow Rate:**

Using the Rational Method:

$Q_{100}$ =CIA= 0.21 6.36 23.6 = 31.58 cfs

C = 0.21 Agriculture, HSG B, slopes 2-6%
I = 6.36 in/hr per City of **Milton** rainfall intensity for Time of Concentration = 15 min
A = 23.6 acres;

* The rational method runoff coefficients and rainfall intensity were determined using the Wisconsin Department of Transportation Facilities Development Manual Procedure 13-10-5 Figures 2 and 4.

| | |
|---|---|
| Designed By: | MAF |
| Date: | 2/4/2020 |
| Checked By: | AFF |
| Date: | 2/4/2020 |

# Ditch Velocity Worksheet

**PROJECT:** Arthur Drive Mini-Warehouses - City of Milton
**FILE NUMBER:** LS-04-20
**LOCATION:** North Side of site

Enter the channel characteristics (see Diagram 1):

| | | |
|---|---|---|
| Channel Slope (S): | 0.008 | feet/feet |
| 10-Year Design Flow (Q): | 0.61 | CFS |
| 100-Year Design Flow (Q): | 1.13 | CFS |
| Bottom Width (W): | 4.0 | feet |
| Avg. Side Slope (X): | 4 | horiz./vert. |
| Min. Depth of Channel (Y): | 2 | feet |
| Retardance Class: | D | |
| Manning's Number (N): | 0.03 | |

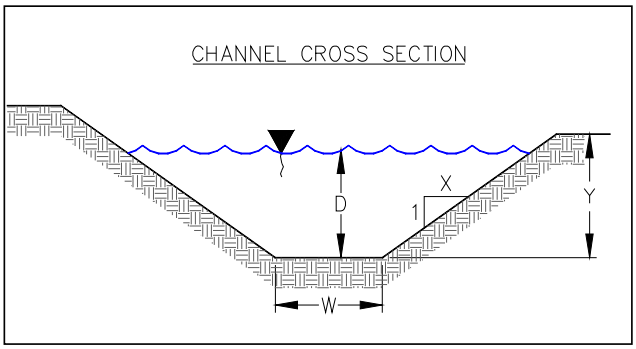


**Diagram 1**

The channel will behave as follows:

| | 10-Year | 100-Year |
|---|---|---|
| **Hydraulic Radius (R):** | **0.11 ft** | **0.16 ft** |
| **Depth (D):** | **0.13 ft** | **0.18 ft** |
| **Velocity (V):** | **1.05 ft/s** | **1.29 ft/s** |

**Shear Stress:** **0.06 psf**

**10-Year Peak Flow Rate:**

Using the Rational Method:

$Q_{10}$ =CIA= 0.72 7.20 0.1 = 0.61 cfs

C = 0.72 Commercial, HSG B, slopes 2-6%
I = 7.20 in/hr per City of **Milton** rainfall intensity for Time of Concentration = 5 min
A = 0.12 acres;

**100-Year Peak Flow Rate:**

Using the Rational Method:

$Q_{100}$ =CIA= 0.89 10.70 0.1 = 1.13 cfs

C = 0.89 Commercial, HSG B, slopes 2-6%
I = 10.70 in/hr per City of **Milton** rainfall intensity for Time of Concentration = 5 min
A = 0.12 acres;

* The rational method runoff coefficients and rainfall intensity were determined using the Wisconsin Department of Transportation Facilities Development Manual Procedure 13-10-5 Figures 2 and 4.

| | |
|---|---|
| Designed By: | MAF |
| Date: | 2/4/2020 |
| Checked By: | AFF |
| Date: | 2/4/2020 |

**Description:**

Drainage Swale – South side of site

**Given:**

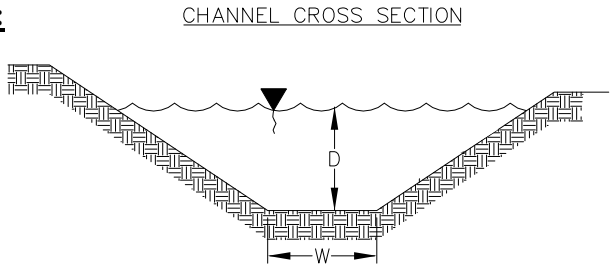


Width (W) = 4 feet
Depth ($D_{10}$) = 0.74 feet
Slope (s) = 0.008 ft/ft

Calculate maximum shear stress in the swale, $\tau_m$:

$\tau_m = \gamma ds = (62.4\ lb/ft^2)(0.74\ ft)(0.008\ ft/ft) = 0.36\ lb/ft^2$

Double Netted Light Duty (WisDOT Class I Type B) erosion mat: $\tau_{m(permissible)} = 1.5\ lb/ft^2$
(Permissible Shear Stress per Facilities Development Manual 10-5-35 Figure 1)

**Description:**

Drainage Swale – North side of site

**Given:**

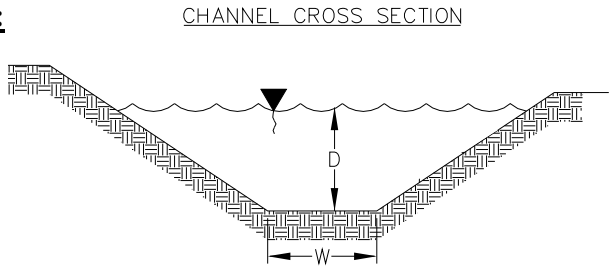


Width (W) = 4 feet
Depth ($D_{10}$) = 0.13feet
Slope (s) = 0.008 ft/ft

Calculate maximum shear stress in the swale, $\tau_m$:

$\tau_m = \gamma ds = (62.4\ lb/ft^2)(0.13\ ft)(0.008\ ft/ft) = 0.06\ lb/ft^2$

Double Netted Light Duty (WisDOT Class I Type B) erosion mat: $\tau_{m(permissible)} = 1.5\ lb/ft^2$
(Permissible Shear Stress per Facilities Development Manual 10-5-35 Figure 1)

## COST ESTIMATE

The following table summarizes the estimated cost of installation for all elements of erosion control and storm water management for the proposed development.

| Item No. | Description | Estimated Quantity | Unit | Unit Price | Amount |
|---|---|---|---|---|---|
| 1. | Stone Construction Entrance | 1 | EA | $500.00 | $500.00 |
| 2. | Silt Fence or Sock | 980 | LF | $2.00 | $1,960.00 |
| 3. | Temporary Rock Check Dam | 3 | EA | $150.00 | $450.00 |
| 4. | Flex Storm Inlet Protection | 2 | EA | $150.00 | $300.00 |
| 5. | Medium Riprap w/ Fabric | 40 | CY | $25.00 | $1,000.00 |
| 6. | WisDOT Class I, Type B, Erosion Mat | 5,000 | SY | $1.00 | $5,000.00 |
| 7. | Bio-retention Device w/ 6” underdrain | 2,950 | SF | $15.00 | $44,250.00 |
| 8. | 15” HDPE Storm Sewer | 89 | LF | $25.00 | $2,225.00 |
| 9. | 2’x3’ Inlet w/ Neenah R-3067 | 2 | EA | $1,200.00 | $2,400.00 |
| 10. | 3’ Dia Outlet Structure w/ Trash Rack | 1 | EA | $1,750.00 | $1,750.00 |
| 11. | Restoration (seed and mulch) | 4,000 | SY | $0.50 | $2,000.00 |
| | **Total** | | | | **$61,835.00** |

# Hydrologic Soil Group—Rock County, Wisconsin

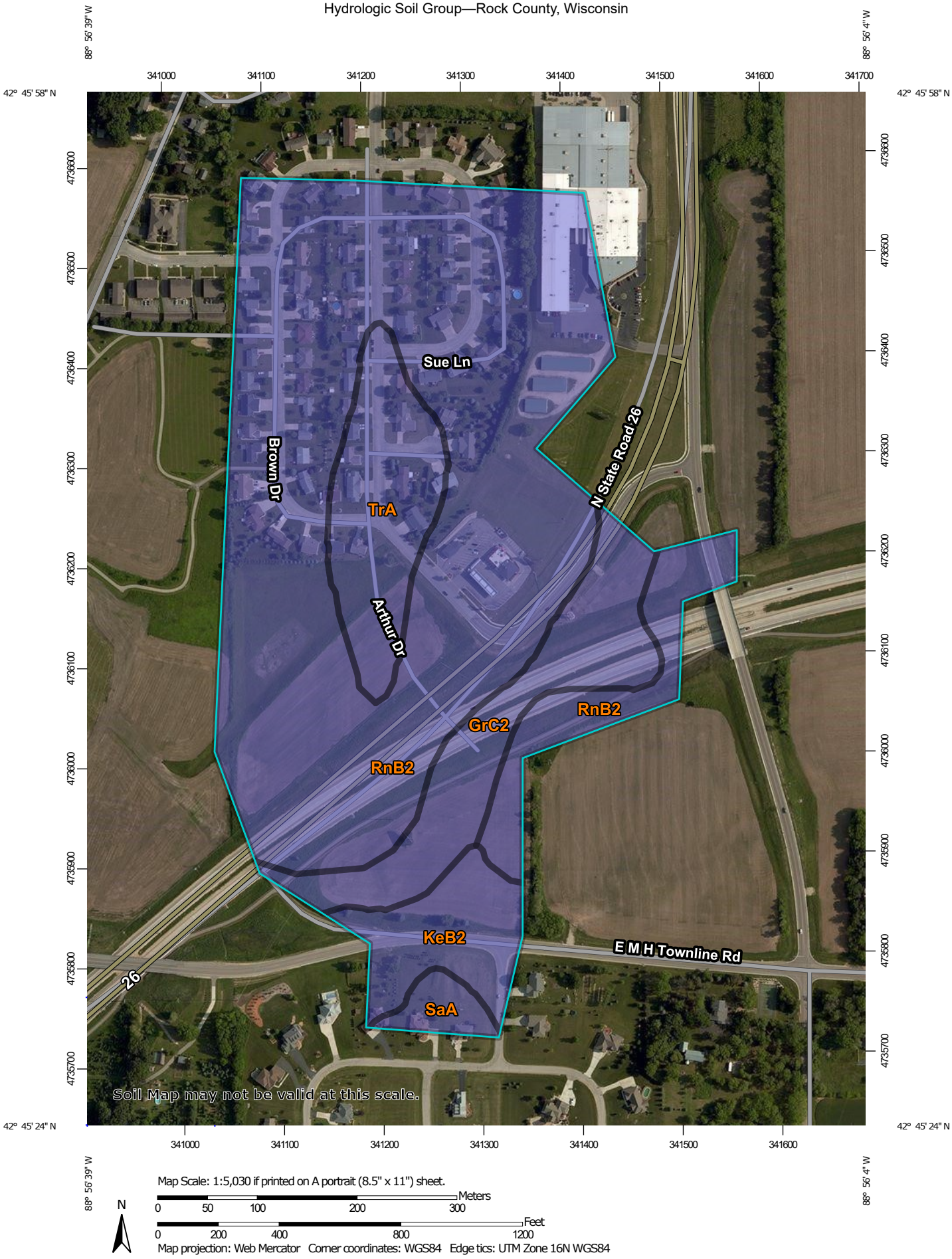

## MAP LEGEND

**Area of Interest (AOI)**

Area of Interest (AOI)

**Soils**

**Soil Rating Polygons**

- A
- A/D
- B
- B/D
- C
- C/D
- D
- Not rated or not available

**Soil Rating Lines**

- A
- A/D
- B
- B/D
- C
- C/D
- D
- Not rated or not available

**Soil Rating Points**

- A
- A/D
- B
- B/D
- C
- C/D
- D
- Not rated or not available

**Water Features**

Streams and Canals

**Transportation**

- Rails
- Interstate Highways
- US Routes
- Major Roads
- Local Roads

**Background**

Aerial Photography

## MAP INFORMATION

The soil surveys that comprise your AOI were mapped at 1:20,000.

Warning: Soil Map may not be valid at this scale.

Enlargement of maps beyond the scale of mapping can cause misunderstanding of the detail of mapping and accuracy of soil line placement. The maps do not show the small areas of contrasting soils that could have been shown at a more detailed scale.

Please rely on the bar scale on each map sheet for map measurements.

Source of Map: Natural Resources Conservation Service
Web Soil Survey URL:
Coordinate System: Web Mercator (EPSG:3857)

Maps from the Web Soil Survey are based on the Web Mercator projection, which preserves direction and shape but distorts distance and area. A projection that preserves area, such as the Albers equal-area conic projection, should be used if more accurate calculations of distance or area are required.

This product is generated from the USDA-NRCS certified data as of the version date(s) listed below.

Soil Survey Area: Rock County, Wisconsin
Survey Area Data: Version 17, Sep 14, 2019

Soil map units are labeled (as space allows) for map scales 1:50,000 or larger.

Date(s) aerial images were photographed: Jun 6, 2015—Jun 10, 2015

The orthophoto or other base map on which the soil lines were compiled and digitized probably differs from the background imagery displayed on these maps. As a result, some minor shifting of map unit boundaries may be evident.

# Hydrologic Soil Group

| Map unit symbol | Map unit name | Rating | Acres in AOI | Percent of AOI |
|---|---|---|---|---|
| GrC2 | Griswold loam, 6 to 12 percent slopes, eroded | B | 8.0 | 11.3% |
| KeB2 | Kidder silt loam, 2 to 6 percent slopes, eroded | B | 4.5 | 6.4% |
| RnB2 | Ringwood silt loam, 2 to 6 percent slopes, eroded | B | 50.6 | 71.1% |
| SaA | St. Charles silt loam, 0 to 2 percent slopes | B | 1.2 | 1.7% |
| TrA | Troxel silt loam, 0 to 3 percent slopes | B | 6.8 | 9.6% |
| **Totals for Area of Interest** | | | **71.2** | **100.0%** |

## Description

Hydrologic soil groups are based on estimates of runoff potential. Soils are assigned to one of four groups according to the rate of water infiltration when the soils are not protected by vegetation, are thoroughly wet, and receive precipitation from long-duration storms.

The soils in the United States are assigned to four groups (A, B, C, and D) and three dual classes (A/D, B/D, and C/D). The groups are defined as follows:

Group A. Soils having a high infiltration rate (low runoff potential) when thoroughly wet. These consist mainly of deep, well drained to excessively drained sands or gravelly sands. These soils have a high rate of water transmission.

Group B. Soils having a moderate infiltration rate when thoroughly wet. These consist chiefly of moderately deep or deep, moderately well drained or well drained soils that have moderately fine texture to moderately coarse texture. These soils have a moderate rate of water transmission.

Group C. Soils having a slow infiltration rate when thoroughly wet. These consist chiefly of soils having a layer that impedes the downward movement of water or soils of moderately fine texture or fine texture. These soils have a slow rate of water transmission.

Group D. Soils having a very slow infiltration rate (high runoff potential) when thoroughly wet. These consist chiefly of clays that have a high shrink-swell potential, soils that have a high water table, soils that have a claypan or clay layer at or near the surface, and soils that are shallow over nearly impervious material. These soils have a very slow rate of water transmission.

If a soil is assigned to a dual hydrologic group (A/D, B/D, or C/D), the first letter is for drained areas and the second is for undrained areas. Only the soils that in their natural condition are in group D are assigned to dual classes.

## Rating Options

*Aggregation Method:* Dominant Condition

*Component Percent Cutoff: None Specified*

*Tie-break Rule:* Higher

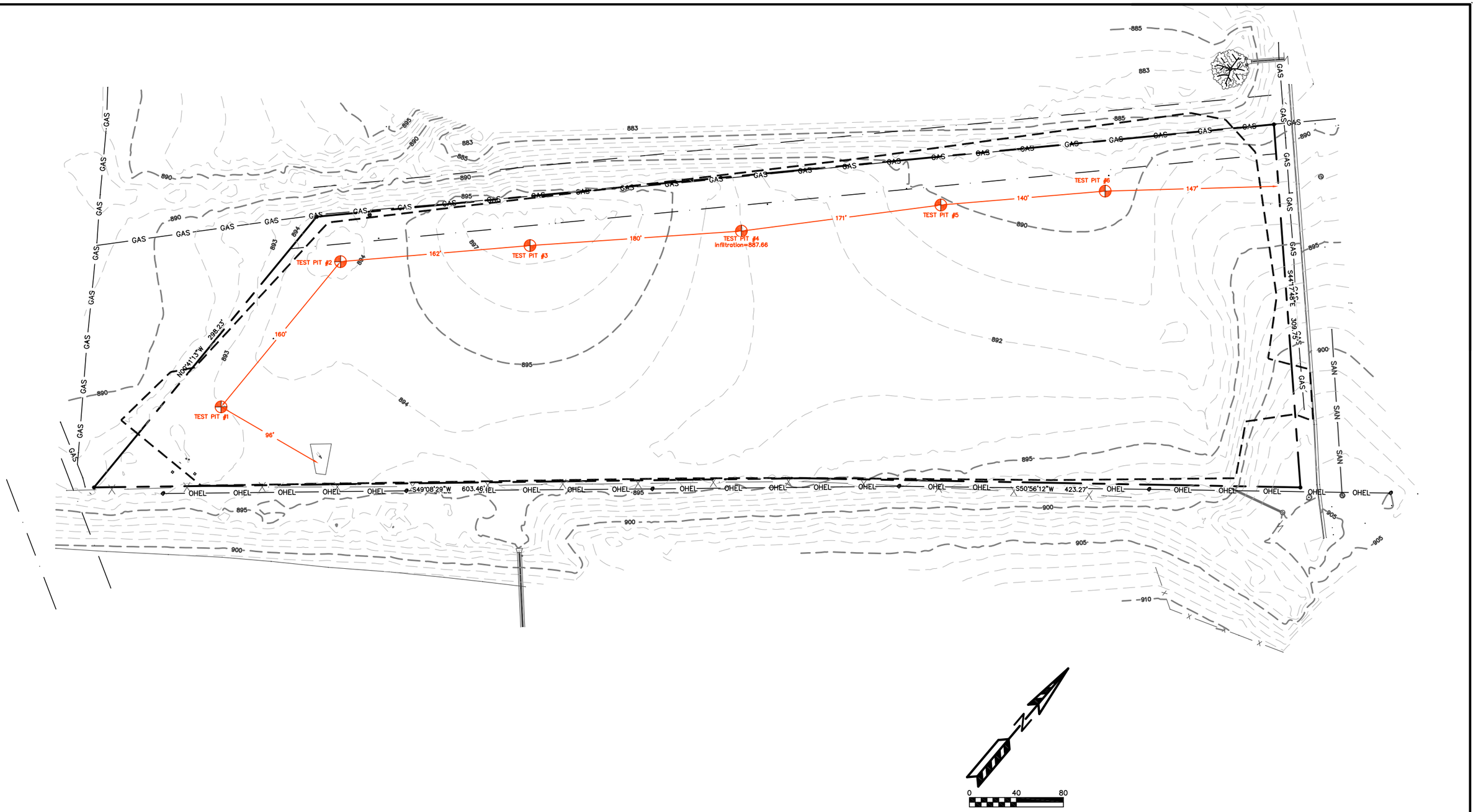


**ARTHUR DRIVE MINI-WAREHOUSES**
**– CITY OF MILTON**
TEST PIT MAP

PAGE: 1
DATED: JANUARY 16, 2020

QUAM ENGINEERING, LLC
Residential and Commercial Site Design Consultants
www.quamengineering.com
4604 Siggelkow Road, Suite A – McFarland, Wisconsin 53558
Phone (608) 838-7750; Fax (608) 838-7752

QUAM ENGINEERING, LLC 4604 Siggelkow Road, Suite A – McFarland, WI 53558 (608) 838-7750 \LS-04-19\LS04BASE.DWG

1002-CPS-23
Division of Industry Services
P. O. Box 2658
Madison, Wisconsin 53701
Scott Walker, Governor
Laura Gutierrez, Secretary

**Attachment 2:**

# SOIL AND SITE EVALUATION – STORM

In accordance with SPS 382.365, 385, Wis. Adm. Code, and WDNR Standard 1002



Attach a complete site plan on paper not less than 8 ½ x 11 inches in size. Plan must include, but not limited to: vertical and horizontal reference point (BM), direction and percent of slope, scale or dimensions, north arrow, and BM referenced to nearest road

***Please print all information***

Personal information you provide may be used for secondary purposes [Privacy Law, s. 15.04(1)(m)]

County: Rock
Parcel I.D.:
Reviewed by:
Date:

Property Owner: Hickey, Anthony
Property Owner' Mail Address: 5409 N. Cypress Dr.
City / State / Zip Code / Phone Number: Milton, WI 53563-9435

Property Location: Govt. Lot ___ ¼ SE ¼ S 34 T 4 N R 13 (E or) W
Lot # / Block # / Subd. Name or CSM #:
☒ City ☐ Village ☐ Town — Nearest Road: Arthur Dr.
Milton

Drainage area _____ ☐ sq .ft ☐ acres

Test site suitable for (check all that apply): ☐ Site not suitable;
☐ Bioretention; ☐ Subsurface Dispersal System;
☐ Reuse; ☐ Irrigation; ☐ Other _____

Hydraulic Application Test Method
☒ Morphological Evaluation
☐ Double Ring Infiltrometer
☐ Other: (specify) _____

Soil Moisture
Date of soil borings: _____
USDA-NRCS WETS Value:
☐ Dry = 1;
☒ Normal = 2;
☐ Wet = 3.

**B1** #OBS. ☒ Pit ☐ Boring Ground surface elevation 893 ft. Elevation of limiting factor 893 ft.

| Horizon | Depth in. | Dominant Color Munsell | Redox Description Qu. Sz. Cont. Color | Texture | Structure Gr. Sz. Sh. | Consistence | Boundary | % Rock Frags. | % Fines | Hydraulic App Rate Inches/Hr |
|---|---|---|---|---|---|---|---|---|---|---|
| 1 | 0-42 | 10YR 4/4 | fill | *grs | 0m | mvfr | as | 25 | – | 0 |
| 2 | 42-52 | 10YR 3/2 | — | sil | 2mgr | mfr | cs | 5 | – | .13 |
| 3 | 52-115 | 10YR 4/4 | C2d 10YR 7/2 7.5YR 5/8 | sicl | 1m6bk | mfr | — | 5 | – | .04 |
| | | | | | | | | | | |
| | | | | | | | | | | |
| | | | | | | | | | | |
| | | | | | | | | | | |

Comments: * Mixed Fill with silt loam and scl.

**B2** #OBS. ☒ Pit ☐ Boring Ground surface elevation 893.2 ft. Elevation of limiting factor 883.2 ft.

| Horizon | Depth in. | Dominant Color Munsell | Redox Description Qu. Sz. Cont. Color | Texture | Structure Gr. Sz. Sh. | Consistence | Boundary | % Rock Frags. | % Fines | Hydraulic App Rate Inches/Hr |
|---|---|---|---|---|---|---|---|---|---|---|
| 1 | 0-8 | 10YR 3/2 | — | sil | 2mgr | mfr | cs | 5 | – | .13 |
| 2 | 8-34 | 10YR 4/4 | — | cl | 1m6bk | mfr | gw | 5 | – | .03 |
| 3 | 34-100 | 10YR 5/4 | — | grs | 0sg | ml | gw | 50 | – | 3.6 |
| 4 | 100-120 | 10YR 5/4 | — | sl | 1fpl | mvfr | — | 15 | – | .5 |
| | | | | | | | | | | |
| | | | | | | | | | | |
| | | | | | | | | | | |

Comments:

Name (Please Print): Jeffrey T. Levake
Signature: [signature]
Credential Number: 225372
Address: P.O. Box 568 Lake Mills, WI 53551
Date Evaluation Conducted: 1-27-2020
Telephone Number: 920-988-7567

SBD-10793 (R01/17)

WDNR
September 2017

B3 #OBS. ☒ Pit ☐ Boring Ground surface elevation. 897.2 ft. Elevation of limiting factor 884.7 ft. Page 2 of 2

| Horizon | Depth in. | Dominant Color Munsell | Redox Description Qu. Sz. Cont. Color | Texture | Structure Gr. Sz. Sh. | Consistence | Boundary | % Rock Frags. | % Fines | Hydraulic App Rate Inches/Hr |
|---|---|---|---|---|---|---|---|---|---|---|
| 1 | 0-72 | 10YR 3/2 | — | sil | 2mgr | mfr | cs | 5 | – | .13 |
| 2 | 72-100 | 10YR 4/4 | — | cl | 1msbk | mfr | gw | 5 | – | .03 |
| 3 | 100-150 | 10YR 5/4 | — | grs | 0sgr | ml | — | 50 | – | 3.6 |

Comments:

B4 #OBS. ☒ Pit ☐ Boring Ground surface elevation. 893 ft. Elevation of limiting factor 883 ft.

| Horizon | Depth in. | Dominant Color Munsell | Redox Description Qu. Sz. Cont. Color | Texture | Structure Gr. Sz. Sh. | Consistence | Boundary | % Rock Frags. | % Fines | Hydraulic App Rate Inches/Hr |
|---|---|---|---|---|---|---|---|---|---|---|
| 1 | 0-24 | 10YR 3/2 | — | sil | 2mgr | mfr | cs | 5 | – | .13 |
| 2 | 24-64 | 7.5YR 4/4 | — | cl | 1msbk | mfr | gw | 5 | – | .03 |
| 3 | 64-120 | 10YR 5/4 | — | grs | 0sgr | ml | — | 50 | – | 3.6 |

Comments:

B5 #OBS. ☒ Pit ☐ Boring Ground surface elevation. 889.7 ft. Elevation of limiting factor 889.7 ft.

| Horizon | Depth in. | Dominant Color Munsell | Redox Description Qu. Sz. Cont. Color | Texture | Structure Gr. Sz. Sh. | Consistence | Boundary | % Rock Frags. | % Fines | Hydraulic App Rate Inches/Hr |
|---|---|---|---|---|---|---|---|---|---|---|
| 1 | 0-48 | 10YR 3/2 | Fill | sil | 1mgr | mfr | cs | 5 | – | .13 |
| 2 | 48-84 | 10YR 4/4 | f/f 7.5YR 5/8 | sicl | 1msbk | mfr | gw | 5 | – | .04 |
| 3 | 84-144 | 7.5YR 4/4 | c2d 7.5YR 5/8 10YR 7/2 | scl | 1msbk | mfr | — | 5 | – | .11 |

Comments:

B6 #OBS. ☒ Pit ☐ Boring Ground surface elevation. 889 ft. Elevation of limiting factor 889 ft.

| Horizon | Depth in. | Dominant Color Munsell | Redox Description Qu. Sz. Cont. Color | Texture | Structure Gr. Sz. Sh. | Consistence | Boundary | % Rock Frags. | % Fines | Hydraulic App Rate Inches/Hr |
|---|---|---|---|---|---|---|---|---|---|---|
| 1 | 0-72 | 10YR 3/2 | Fill | sil | 1mgr | mfr | cs | 5 | – | .13 |
| 2 | 72-112 | 10YR 4/4 | f/f 7.5YR 5/8 | sicl | 1msbk | mfr | gw | 5 | – | .04 |
| 3 | 112-144 | 7.5YR 4/4 | c2d 7.5YR 5/8 10YR 7/2 | scl | 1msbk | mfr | — | 5 | – | .11 |

Comments:

SBD-10793 (R 7/17)

Overall Site Comments:

# Stormwater Maintenance Plan

**Storm Sewer:**

- Visual inspection of components shall be performed, and debris removed from inlets and storm sewer manholes.

- Repair inlet/outlet areas that are damaged or show signs of erosion.

- Repairs must restore the component to the specifications of the original plan.

**Riprap**

- Riprap should be inspected after all storm events for displaced stones and erosion. All necessary repairs should be made immediately.

- Accumulated sediment should be removed periodically.

**Bio-Retention Device**

- Owner shall install and maintain Bio-Retention Device in accordance with plans approved by the City. Owner shall maintain records of installation, inspections, cleaning and any other maintenance all in accordance with the applicable Ordinances. Visual Inspection of the Bio-Retention Device shall be performed monthly to identify and repair eroded areas and remove liter and debris, if applicable.

- The Owner shall maintain plants by watering, weeding, hand pulling and/or herbicide applications, restoring plant saucers around planting holes, tightening and repairing any guy supports, replacing flagging of guy wires, pruning and resetting plants to proper grades or vertical positions, as required to establish healthy, viable plantings. Herbicide treatments shall be performed by licensed applicators who are experienced with native and non-native plant identification. Herbicides will be used in full conformance with label requirements and application techniques will limit overspray and damage to off-target species.

- The Owner is responsible for a spot selective invasive weed control treatment on the entire basin area once in the initial growing season, two times in the first full growing season after seeding, two times in the second full growing season after seeding, and three times in the third full growing season after seeding. This can include combinations of hand weed control and selective herbicide treatment. Herbicide treatment can be conducted with tools such as handheld or backpack sprayers. Examples of common invasive species to be controlled from spread are Narrow-leaved cattail and reed canary grass in wetland areas; Canada thistle, Flowering spurge, Common teasel, Sweet clover, Red clover, Wild parsnip are examples of more upland type species to be controlled. Applications to perennial weeds need to occur prior to seed formation of such species. If such species do go to seed, contractor is responsible for cutting the seed heads, bagging them, and removing them from the project site. Herbicide applications that are necessary must be performed by qualified personnel trained in the identification of native species and also licensed appropriately for herbicide applications in the state or region in which they are applying.

- Watering shall be provided every day for the first 10 days after installation, if rainfall is not sufficient. If plantings are planted in spring, water for 3 to 6 weeks after seed placement. If plantings are planted in the fall, water for 3 to 6 weeks in the spring if dry conditions exist until established. Apply water in a manner to preclude puddling, washing and erosion. The equivalent of one-half inch of rainfall per week shall be considered the minimum until germination.

- All areas of the Bio-Retention Device where the mulch has been displaced shall be re-mulched as needed. Additional mulch shall be applied annually.

- Snow shall not be dumped directly onto the Bio-Retention Device.

- Maintenance of the Bio-Retention Device shall conform to Wisconsin Department of Natural Resources Technical Standard 1004.

- Repair shall be required when system shows standing water beyond 24 hours of rain event. Cleaning shall consist of removal of sediment, two (2) foot undercut, undercut replacement with material consisting of 30% compost and 70% sand and restoration in-kind. Restoration of plant material shall be by plugging, not seeding alone.

- Any alterations to approved Bio-Retention Device shall be approved by the City. Owner shall maintain records of inspections, cleaning and replacement of the Bio-Retention Device all in accordance with the City Ordinances.

CITY OF MILTON

a community since 1838

# Department of Public Works

**To:** Mayor Welch, Milton Plan Commission
**From:** Howard Robinson, Director of Public Works
**Date:** June 2, 2020
**Subject:** Discussion and Possible Action Regarding Site Plan Approval for 310 Sunnyside, 24 Hour Home Comfort Services, Mini Storage Units.

---

**Summary**

KT Enterprises (24 Hour Home Comfort Services), located at 310 Sunnyside Drive has submitted a site plan for the future construction of mini-storage within the balance of their existing property. Plans are included that show a site layout for proposed construction. The lot is zoned M-1. Mini warehouses are a permitted use. The site plan show the planned construction for the entire lot. The site plan meets city ordinance requirements in regards to setbacks, lighting, landscaping, and building materials. Additionally, the Zoning Board of Appeals granted a variance to allow one parking stall per twenty units. They have submitted a storm water plan for review by the City Engineer. Construction is planned for spring or summer 2020. The buildings will look similar to the existing mini warehouses structures. Building permits and DNR storm water approval plans will be required.

**Recommendation**

City Administration recommends approval of the site plan request.

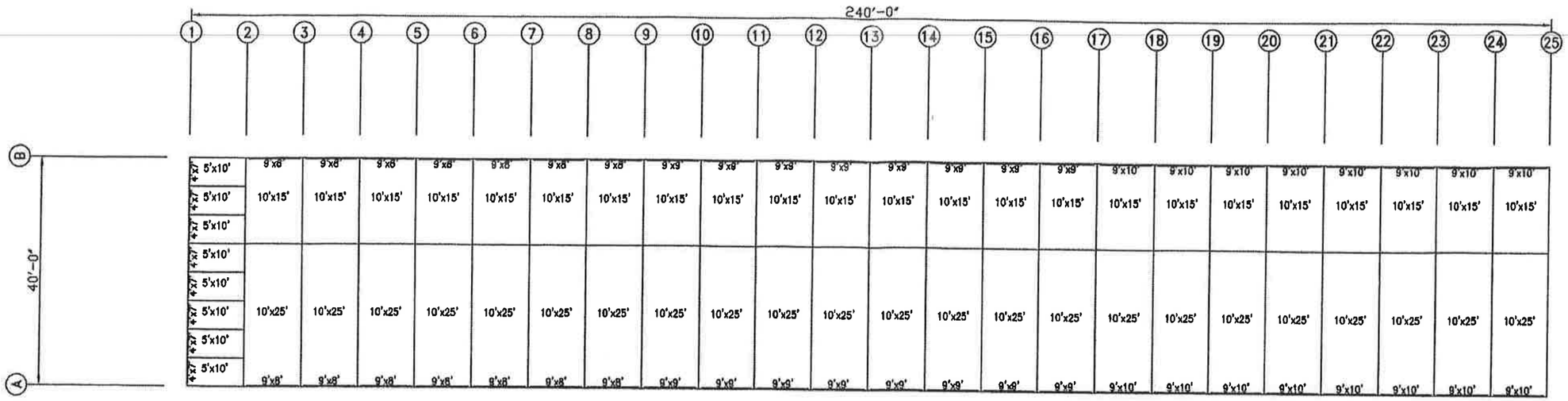


UNIT LAYOUT

MINI SYSTEMS, INC.

Bus: (888) MY-1-MINI P.O. Box 520
Fax: (888) 748-9504 SARDIS, MS 38666

| | | |
|---|---|---|
| SCALE: NONE<br>DATE: 6-3-13 | APPROVED BY:<br>Tracy Crutcher | DRAWN BY: tc<br>REVISED: |
| Tom Pavlik<br>MILTON, WI | 40'-0" x 240'-0" x 8'-6" Mini Storage | |
| ERECTION PLAN | JOB NO. / DRAWING NO. U1 | ISSUE |

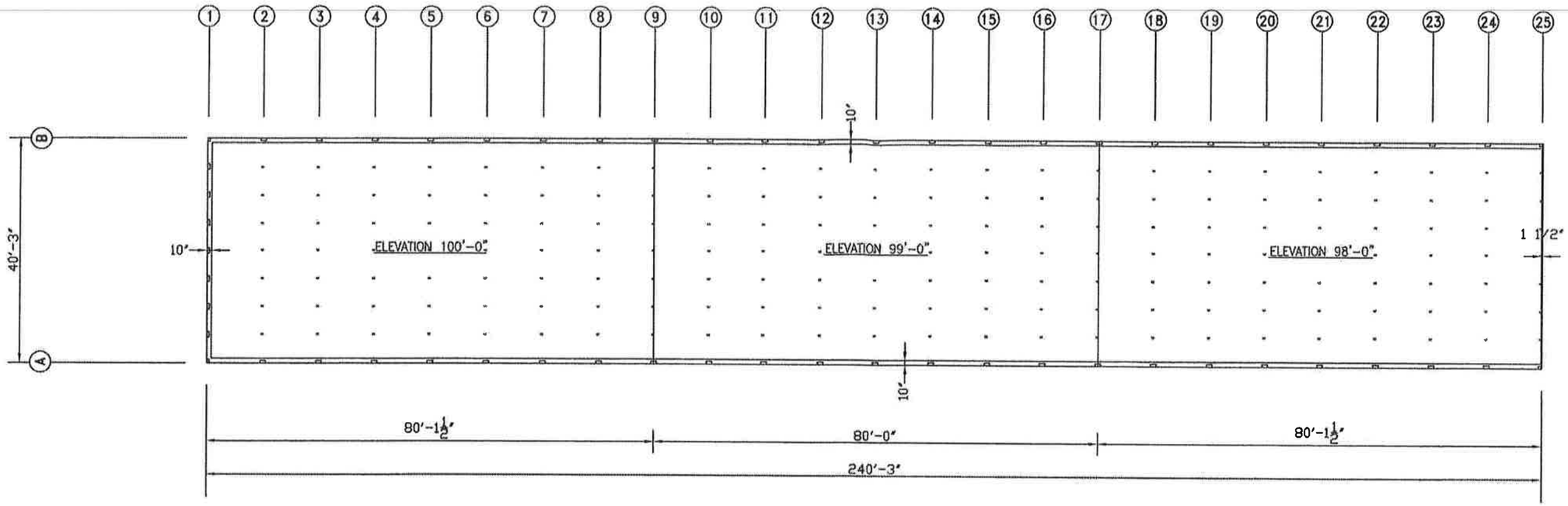


SLAB PLAN

| REACTION LOADS AT POST LOCATIONS | | |
|---|---|---|
| DL + LL + COL : | 2000.0 | LBS |
| DL + WL : | 125.0 | LBS |
| LONGITUDINAL HORIZONTAL WIND LOAD : | 1748.4 | LBS |
| LATERAL HORIZONTAL WIND LOAD : | 10490.7 | LBS |


MINI SYSTEMS, INC.

Bus: (888) MY-1-MINI P.O. Box 520
Fax: (888) 748-9504 SARDIS, MS 38666


| | | |
|---|---|---|
| SCALE: NONE | APPROVED BY: | DRAWN BY: tc |
| DATE: 6-3-13 | Tracy Crutcher | REVISED: |
| Tom Pavlik<br>MILTON, WI | 40'-0" x 240'-0" x 8'-6" Mini Storage | |
| ERECTION PLAN | JOB NO. / DRAWING NO. F1 | ISSUE |

## COLD FORMED STEEL COMPONETS YEILD STRENGTH = 57 KSI (TYP)

| SECTION NAME | DIMENSIONS | | | | | SECTION PROPERTIES | | | | |
|---|---|---|---|---|---|---|---|---|---|---|
| | GA | A | B1 | B2 | L | AREA $IN^2$ | Ix $IN^4$ | Se $IN^3$ | Iy $IN^4$ | Sy $IN^3$ |
| 4 X 2.5 Z | 16 | 4" | 2 1/8" | 2 3/8" | .90" | .61 | 1.54 | .72 | 1.12 | .39 |
| 4 X 2.5 Z | 14 | 4" | 2 1/8" | 2 3/8" | .92" | .76 | 1.97 | .95 | 1.40 | .48 |
| 6 X 2.5 Z | 16 | 6" | 2 1/8" | 2 3/8" | .90" | .73 | 3.95 | 1.23 | 1.12 | .38 |
| 6 X 2.5 Z | 14 | 6" | 2 1/8" | 2 3/8" | .92" | .91 | 5.05 | 1.63 | 1.40 | .48 |
| 6 X 2.5 Z | 12 | 6" | 2 1/8" | 2 3/8" | .97" | 1.28 | 7.01 | 2.29 | 2.01 | .68 |
| 8 X 2.5 Z | 16 | 8" | 2 1/8" | 2 3/8" | .90" | .85 | 7.78 | 1.80 | 1.12 | .38 |
| 8 X 2.5 Z | 14 | 8" | 2 1/8" | 2 3/8" | .92" | 1.06 | 9.94 | 2.41 | 1.40 | .48 |
| 8 X 2.5 Z | 12 | 8" | 2 1/8" | 2 3/8" | .97" | 1.49 | 13.87 | 3.41 | 2.01 | .68 |
| 10 X 2.5 Z | 14 | 10" | 2 1/8" | 2 3/8" | .92" | 1.21 | 16.95 | 3.30 | 1.40 | .48 |
| 10 X 2.5 Z | 12 | 10" | 2 1/8" | 2 3/8" | .97" | 1.71 | 23.71 | 4.67 | 2.01 | .67 |
| 12 X 2.5 Z | 14 | 12" | 2 1/8" | 2 3/8" | .92" | 1.36 | 25.94 | 3.92 | 1.40 | .48 |
| 12 X 2.5 Z | 12 | 12" | 2 1/8" | 2 3/8" | .97" | 1.92 | 36.97 | 6.08 | 2.01 | .67 |

SHAPE

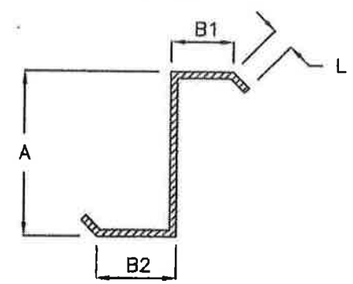


1. Ix is for deflection determination
2. Se is for bending
3. Sy and Iy are for full section.
   Sectional Properties are taken from the LGSI Handbook 2/95-35M

## COLD FORMED STEEL COMPONETS YEILD STRENGTH = 57 KSI (TYP)

| SECTION NAME | DIMENSIONS | | | | SECTION PROPERTIES | | | | |
|---|---|---|---|---|---|---|---|---|---|
| | GA | A | B | L | AREA $IN^2$ | Ix $IN^4$ | Se $IN^3$ | Iy $IN^4$ | Sy $IN^3$ |
| 4 X 2 C | 16 | 4" | 2" | .75" | .56 | 1.39 | .68 | .34 | .27 |
| 4 X 2.5 C | 16 | 4" | 2 1/2" | .75" | .61 | 1.58 | .69 | .55 | .35 |
| 4 X 2.5 C | 14 | 4" | 2 1/2" | .78" | .76 | 1.98 | .90 | .68 | .43 |
| 4 X 4 C | 16 | 4" | 4" | .75" | .79 | 1.94 | .80 | 1.71 | .71 |
| 4 X 4 C | 14 | 4" | 4" | .78" | .98 | 2.49 | 1.04 | 2.12 | .89 |
| 6 X 4 C | 16 | 6" | 4" | .75" | .91 | 4.84 | 1.35 | 1.98 | .76 |
| 6 X 4 C | 14 | 6" | 4" | .78" | 1.14 | 6.18 | 1.76 | 2.46 | .94 |
| 8 X 2.5 C | 16 | 8" | 2 1/2" | .75" | .85 | 7.94 | 1.75 | .70 | .38 |
| 8 X 2.5 C | 14 | 8" | 2 1/2" | .78" | 1.06 | 9.98 | 2.30 | .87 | .47 |
| 8 X 2.5 C | 12 | 8" | 2 1/2" | .84" | 1.49 | 13.90 | 3.47 | 1.22 | .66 |
| 10 X 4 C | 14 | 10" | 4" | .78" | 1.44 | 19.65 | 3.33 | 2.92 | 1.01 |
| 10 X 4 C | 12 | 10" | 4" | .84" | 2.03 | 30.17 | 5.32 | 4.12 | 1.42 |
| 12 X 4 C | 16 | 12" | 4" | .47" | 1.18 | 25.45 | 4.24 | 2.04 | .66 |
| 12 X 4 C | 14 | 12" | 4" | .78" | 1.59 | 29.30 | 4.05 | 3.09 | 1.03 |

SHAPE

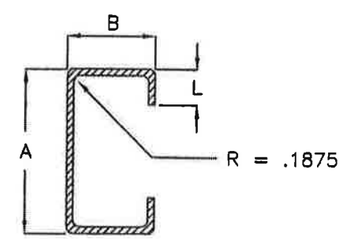


1. Ix is for deflection determination
2. Se is for bending
3. Sy and Iy are for full section.
   Sectional Properties are taken from the LGSI Handbook 2/95-35M

Except for the Sectional Properties for the 12 x 4 C 16ga which are Supplied by MBCI.


MINI SYSTEMS, INC.

Bus: (888) MY-1-MINI P.O. Box 520
Fax: (888) 748-9504 SARDIS, MS 38666


| | | |
|---|---|---|
| SCALE: NONE | APPROVED BY: Tracy Crutcher | DRAWN BY: tc |
| DATE: 6-3-13 | | REVISED: |
| Tom Pavlik<br>MILTON, WI | 40'-0" x 240'-0" x 8'-6" Mini Storage | |
| ERECTION PLAN | JOB NO. / DRAWING NO. D2 | ISSUE |

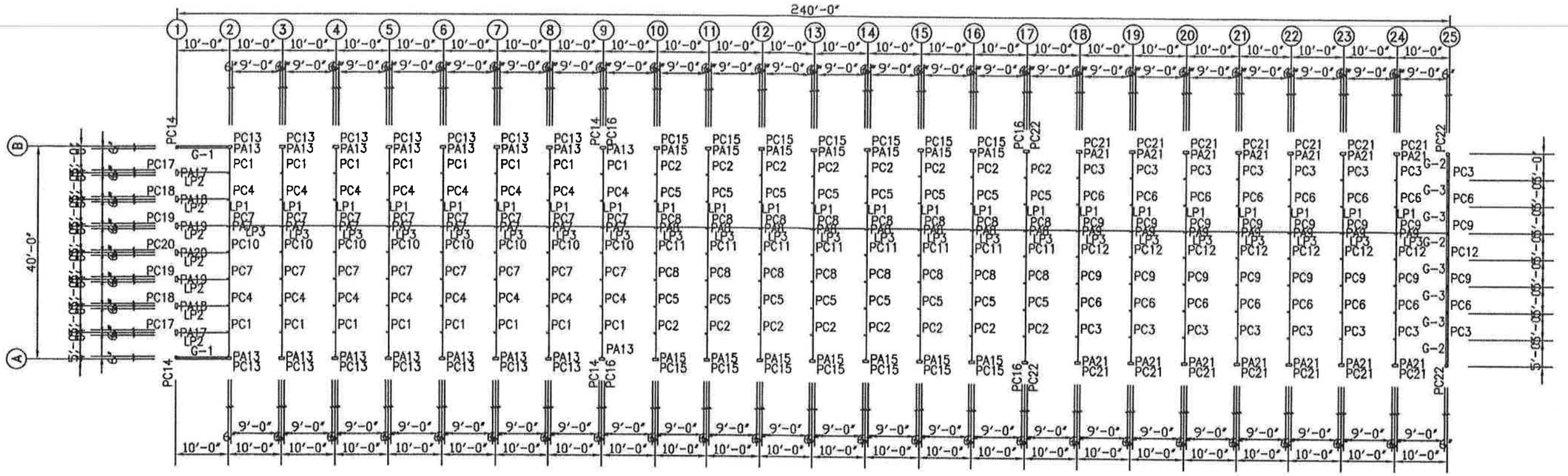


FLOOR PLAN

| MEMBER TABLE | |
|---|---|
| MARK | MEMBER |
| PC1 | 4x2.0 C 16 Ga – 9'-8 1/2" |
| PC2 | 4x2.0 C 16 Ga – 10'-8 1/2" |
| PC3 | 4x2.0 C 16 Ga – 11'-8 1/2" |
| PC4 | 4x2.0 C 16 Ga – 9'-11" |
| PC5 | 4x2.0 C 16 Ga – 10'-11" |
| PC6 | 4x2.0 C 16 Ga – 11'-11" |
| PC7 | 4x2.0 C 16 Ga – 10'-1 1/2" |

| MEMBER TABLE | |
|---|---|
| MARK | MEMBER |
| PC8 | 4x2.0 C 16 Ga – 11'-1 1/2" |
| PC9 | 4x2.0 C 16 Ga – 12'-1 1/2" |
| PC10 | 4x2.0 C 16 Ga – 10'-4" |
| PC11 | 4x2.0 C 16 Ga – 11'-4" |
| PC12 | 4x2.0 C 16 Ga – 12'-4" |
| PC13 | 12X4 C 16 Ga – 9'-7" |
| PC14 | 6X4 C 16 Ga – 9'-7" |

| MEMBER TABLE | |
|---|---|
| MARK | MEMBER |
| PC15 | 12X4 C 16 Ga – 10'-7" |
| PC16 | 6X4 C 16 Ga – 10'-7" |
| PC17 | 12X4 C 16 Ga – 9'-5 1/2" |
| PC18 | 12X4 C 16 Ga – 9'-8" |
| PC19 | 12X4 C 16 Ga – 9'-10 1/2" |
| PC20 | 12X4 C 16 Ga – 10'-1" |
| G1 | 4x2.0 C 16 Ga – 9'-1" |

| MEMBER TABLE | |
|---|---|
| MARK | MEMBER |
| PC21 | 12X4 C 16 Ga – 11'-7" |
| PC22 | 6X4 C 16 Ga – 11'-7" |
| G2 | 4x2.0 C 16 Ga – 4'-7" |
| G3 | 4x2.0 C 16 Ga – 4'-9" |
| LP1 | U Panel 29 Ga Glume – 39'-3" |
| LP2 | U Panel 29 Ga Glume – 9'-7" |
| LP3 | U Panel 29 Ga Glume – 9'-10" |


MINI SYSTEMS, INC.

Bus: (888) MY-1-MINI P.O. Box 520
Fax: (888) 748-9504 SARDIS, MS 38666


| | | |
|---|---|---|
| SCALE: NONE | APPROVED BY: | DRAWN BY: tc |
| DATE: 6-3-13 | Tracy Crutcher | REVISED: |
| Tom Pavlik<br>MILTON, WI | 40'-0" x 240'-0" x 8'-6" Mini Storage | |
| ERECTION PLAN | JOB NO. / DRAWING NO. E1 | ISSUE |

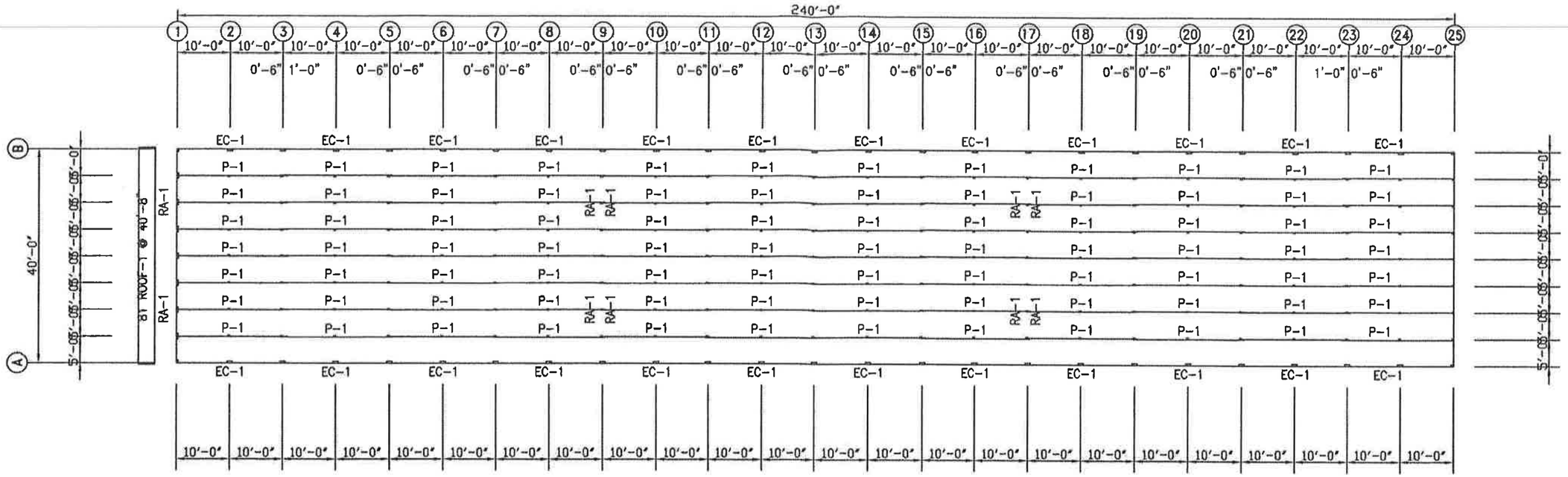


## ROOF FRAMING PLAN

| MEMBER TABLE | |
|---|---|
| MARK | MEMBER |
| P1 | Purlin 4x2.5 Zx14Ga – 21'–0" |
| EC1 | Eave Channel 4–1/8x2 14GA – 20'–0" |
| RA1 | Rake L4*2*16 Ga – 20'–1 1/2" |
| ROOF1 | PBR Panel 26 Ga Glume – 40'–8" |


MINI SYSTEMS, INC.

Bus: (888) MY–1–MINI P.O. Box 520
Fax: (888) 748–9504 SARDIS, MS 38666


| | | |
|---|---|---|
| SCALE: NONE | APPROVED BY: Tracy Crutcher | DRAWN BY: tc |
| DATE: 6-3-13 | | REVISED: |
| Tom Pavlik<br>MILTON, WI | 40'-0" x 240'-0" x 8'-6" Mini Storage | |
| ERECTION PLAN | JOB NO. | DRAWING NO. E2 / ISSUE |

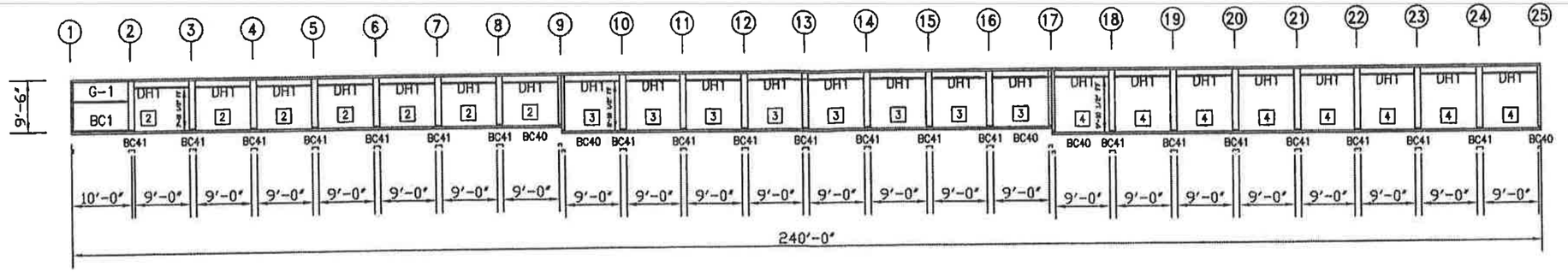


FRONT SIDEWALL FRAMING

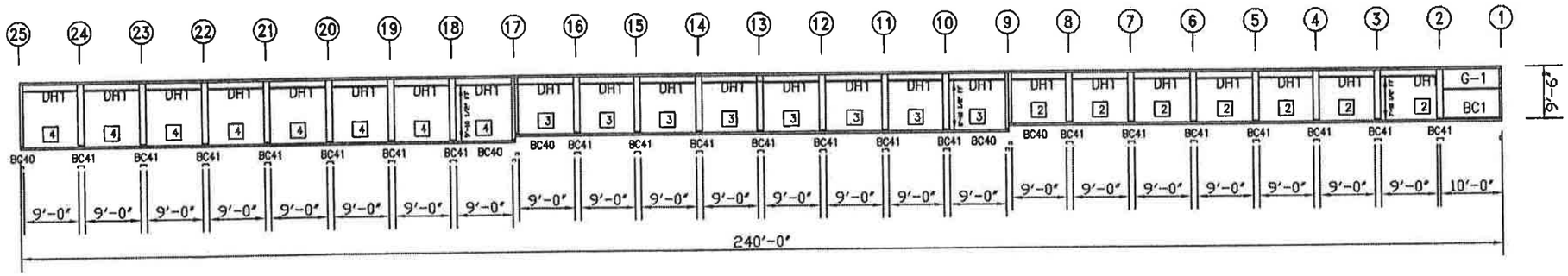


BACK SIDEWALL FRAMING

## MEMBER TABLE

| MARK | MEMBER |
|---|---|
| DH1 | 4x2.0 C 16 Ga - 8'-11" |
| G1 | 4x2.0 C 16 Ga - 9'-1" |
| 2 | 9'-0" x 8'-0" Door M650 |
| 3 | 9'-0" x 9'-0" Door M650 |
| 4 | 9'-0" x 10'-0" Door M650 |


MINI SYSTEMS, INC.

Bus: (888) MY-1-MINI P.O. Box 520
Fax: (888) 748-9504 SARDIS, MS 38666


| | | |
|---|---|---|
| SCALE: NONE<br>DATE: 6-3-13 | APPROVED BY: Tracy Crutcher | DRAWN BY: tc<br>REVISED: |
| Tom Pavlik<br>MILTON, WI | 40'-0" x 240'-0" x 8'-6" Mini Storage | |
| ERECTION PLAN | JOB NO. / DRAWING NO. E3 | ISSUE |

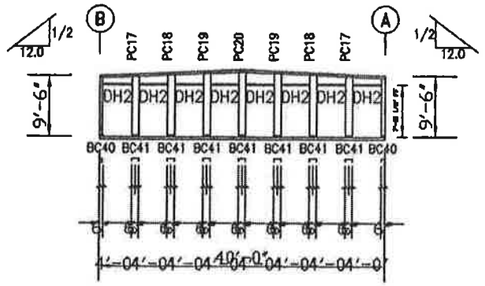


LEFT ENDWALL FRAMING

LEFT ENDWALL SHEETING

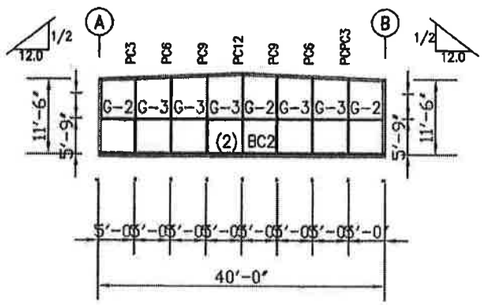


RIGHT ENDWALL FRAMING

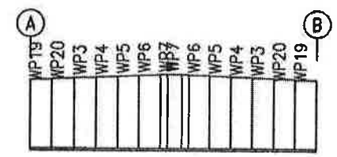


RIGHT ENDWALL SHEETING

| MEMBER TABLE | |
|---|---|
| MARK | MEMBER |
| DH2 | 4x2.0 C 16 Ga – 3'–11" |
| G2 | 4x2.0 C 16 Ga – 4'–7" |
| G3 | 4x2.0 C 16 Ga – 4'–9" |
| 1 | 4'–0" x 8'–0" Door M650 |

| MEMBER TABLE | |
|---|---|
| MARK | MEMBER |
| WP–19 | PBR Panel 26 Ga Sig 200 – 11'–6 1/2" |
| WP–20 | PBR Panel 26 Ga Sig 200 – 11'–8 1/2" |
| WP–3 | PBR Panel 26 Ga Sig 200 – 11'–10" |
| WP–4 | PBR Panel 26 Ga Sig 200 – 11'–11 1/2" |
| WP–5 | PBR Panel 26 Ga Sig 200 – 12'–1" |
| WP–6 | PBR Panel 26 Ga Sig 200 – 12'–2 1/2" |
| WP–7 | PBR Panel 26 Ga Sig 200 – 12'–4" |

| MEMBER TABLE | |
|---|---|
| MARK | MEMBER |
| WP–2 | PBR Panel 26 Ga Sig 200 – 1'–6 1/2" |
| WP–12 | PBR Panel 26 Ga Sig 200 – 1'–8 1/2" |
| WP–13 | PBR Panel 26 Ga Sig 200 – 1'–10" |
| WP–14 | PBR Panel 26 Ga Sig 200 – 1'–11 1/2" |
| WP–15 | PBR Panel 26 Ga Sig 200 – 2'–1" |
| WP–16 | PBR Panel 26 Ga Sig 200 – 2'–2 1/2" |
| WP–17 | PBR Panel 26 Ga Sig 200 – 2'–4" |

MINI SYSTEMS, INC.

Bus: (888) MY–1–MINI P.O. Box 520
Fax: (888) 748–9504 SARDIS, MS 38666

| | | |
|---|---|---|
| SCALE: NONE | APPROVED BY: | DRAWN BY: tc |
| DATE: 6-3-13 | Tracy Crutcher | REVISED: |
| Tom Pavlik<br>MILTON, WI | 40'-0" x 240'-0" x 8'-6" Mini Storage | |
| ERECTION PLAN | JOB NO. / DRAWING NO. E4 | ISSUE |

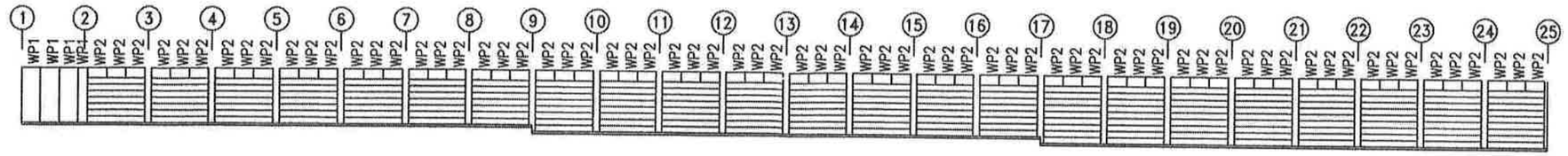


FRONT SIDEWALL SHEETING

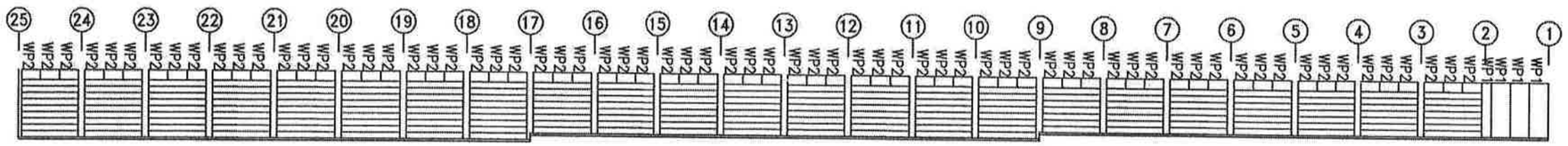


BACK SIDEWALL SHEETING

## MEMBER TABLE

| MARK | MEMBER |
|---|---|
| WP1 | PBR PANEL 26 Ga SIG200 - 9'-6 1/2" |
| WP2 | PBR PANEL 26 Ga SIG200 - 1'-6 1/2" |

MINI SYSTEMS, INC.

Bus: (888) MY-1-MINI P.O. Box 520
Fax: (888) 748-9504 SARDIS, MS 38666

| | | |
|---|---|---|
| SCALE: NONE | APPROVED BY: Tracy Crutcher | DRAWN BY: tc |
| DATE: 6-3-13 | | REVISED: |
| Tom Pavlik<br>MILTON, WI | 40'-0" x 240'-0" x 8'-6" Mini Storage | |
| ERECTION PLAN | JOB NO. / DRAWING NO. E5 | ISSUE |

## GENERAL NOTES:

1. Contractor shall verify all dimensions and conditions at the job site before commencing work, and shall report any discrepancies to MINI SYSTEMS.
2. Omissions or conflicts between various elements of the drawings, notes, and details shall be brought to the attention of MINI SYSTEMS before proceeding with the work.
3. Do Not Scale Dimensions from the drawings. Where no dimension is provided, consult MINI SYSTEMS prior to proceeding with the work.
4. Details shown shall be incorporated into the project at all appropriate locations whether specifically referenced at all such locations or not.
5. No additions or alterations shall be made to drawings without the permission of MINI SYSTEMS, except as noted under the section listed as (APPROVAL NOTES).
6. The Structure under this contract has been designed and detailed for the LOADS and Conditions stipulated in the contract and shown on these drawings, any Alterations to the Structural System or Removal of any Component Parts, or the addition of other construction materials or Loads must be done under the Advice and direction of a REGISTERED ARCHITECT, CIVIL, or STRUCTURAL Engineer Mini Systems will assume NO RESPONSIBILITY for any LOADS not Indicated.
7. This Metal Building is Designed with Mini Systems Standard Practices which are based on Pertinent Procedures and Recommendations of the following Organizations and Codes.
   A) AMERICAN IRON AND STEEL INSTITUTE: "Specification for the Design of Cold Formed Steel Structural Members"
   B) METAL BUILDING MANUFACTURER'S ASSOCIATION: "Low Rise Building Systems Manual"
   C) INTERNATIONAL CONFERENCE OF BUILDING OFFICIALS: "(U.B.C.) Uniform Building Code"
   D) SOUTHERN BUILDING CODE CONGRESS INTERNATIONAL: (S.B.C.) Standard Building Code"
   E) BUILDING OFFICIAL AND CODE ADMINISTRATORS INTERNATIONAL: "(B.O.C.A.) Basic Building Code"

## APPROVAL NOTES:

THE FOLLOWING CONDITIONS APPLY IN THE EVENT THAT THESE DRAWINGS ARE USED AS APPROVAL DRAWINGS.

1. It is Imperative that any changes to these drawings
   A.) Be made in Contrasting INK
   B.) Be Legible and Unambigous
   C.) Have ALL instances of change CLEARLY indicated
   D.) Be returned to Mini Systems, Inc. within Five (5) working days of changes being made
2. Dated Signature is Required on ALL PAGES
3. Mini Systems Reserves the Right to Re-Submit Drawings with Extensive or Complex Changes Required to avoid misfabrication. THIS MAY IMPACT THE DELIVERY SCHEDULE.
4. APPROVAL of these drawings Indicates Conclusively that Mini Systems has Correctly Interpreted the Contract Requirments and Futher Constitutes Agreement that the Building as Drawn, or as Drawn with Indicated Changes represents the Totality of the Materials to be Supplied by Mini Systems.
5. Any changes noted on the Drawings Not in Conformance with the Terms and Requirements of the Contract between Mini Systems and Its Customers are not Binding on Mini Systems. Unless Subsequently Specifically Acknowledged and Agreed to in Writing by Change Order or Separate Documentation.

   Mini Systems recognizes that rubber stamps are routinely used for indicating Approval, Disapproval, Rejection, or Meer Review of the Drawings Submitted. However, Mini Systems Does Not Accept Changes or Additions to Contractual Terms and Conditions that May Appear with the Use of a Stamp or Similar Indication of Approval, Disapproval, ETC., Such language Applied to Mini Systems Drawings by the Customer, Architect, Engineer, or Any Other Party will be Considered as Unacceptable Alterations to these Drawing Notes, and Will Not Alter the Contractual Rights and Obligations Existing Between Mini Systems and its Customer.

## BUILDER / CONTRACTOR RESPONSIBILITIES:

1. It's the responsibility of the Builder / Contractor to insure that all project plans and specifications comply with the appicable requirements of any Governing Building Authorities. The supplying of Sealed Drawings and/or Engineering Data for the Metal System DOES NOT IMPLY or CONSTITUTE an AGREEMENT that Mini Systems or its Design Engineer is Acting as The Engineer of Record or The Design Professional for a Construction Project.
2. Approval of Mini Systems drawings Indicate's that Mini Systems Has Correctly Interpreted and applied the Requirements of the Contract.
3. Design Considerations of any Materials in the Structure which ARE NOT Furnished by Mini Systems are the Responsibility of the Contractors and Engineers, other than Mini Systems Engineers Unless Specifically Indicated.
4. The Contractor is Responsible for all Erection of Steel and Associated work in Compliance with Mini Systems "FOR CONSTRUCTION" Drawings, Mini Systems will Assume NO Responsibility or Liabilty for Improperly Erected or Installed Material.
5. Products Shipped to the Builder or his Customer Shall be Inspected By the Builder or his Customer IMMEDIATELY Upon Arrival. Claims for Shortages or Defective Material must be Mailed to Mini Systems in Writing Within Three ( 3 ) Days After Receipt of the Shipment. However, if a Defect is of such a nature that Reasonable Visual Inspection would Fail to Disclose it, Then the Claim must be made within Three ( 3 ) Days after the Builder learns of the Defect. ( Unless the Builder works for Mini Systems in which case The Builder Must call in and fax a copy of the Shortage and/or of the Defective Material within ONE ( 1 ) day of receipt ). Mini Systems will not be Liable for any Defect unless Claim is made within ONE ( 1 ) Year after the Date of the Original Shipment By Mini Systems to the Builder or his Customer. Mini Systems Will Be Given a Reasonable Opportunity to Inspect Defective Materials upon receipt of a Claim by the Builder or his Customer.
6. If a Defect is of such a Nature that it can be Remedied by a Field Operation at the job site without the necessity of returning the material to Mini Systems, Then upon Written Authorization by Mini Systems the Builder or his Customer may repair or cause the Material to be repaired and Mini Systems will reimburse the Builder or his Customer the cost of the repair in accordance with the written Authorization.
7. All bracing as shown and provided by Mini Systems for this Building is required and shall be installed by the Erector as a permanent part of the Structure, unless otherwise Specified.
8. Temporary supports, such as temporary guys, braces, falsework, cribbing or other elements required for the erection operation will be determined and furnished and installed by the erector. These temporary supports will secure the steel framing, or any partly assembled steel framing against loads comparable in intensity to those for which the structure was designed, resulting from wind, seismic forces and erection operations, but not the loads resulting from the performance of work by or acts of others, nor such unpredictable loads as those due to Tornado, Explosion, or Collision.


MINI SYSTEMS, INC.

Bus: (888) MY-1-MINI P.O. Box 520
Fax: (888) 748-9504 SARDIS, MS 38666


| | | |
|---|---|---|
| SCALE: NONE | APPROVED BY: | DRAWN BY: tc |
| DATE: 6-3-13 | Tracy Crutcher | REVISED: |
| Tom Pavlik<br>MILTON, WI | 40'-0" x 240'-0" x 8'-6" Mini Storage | |
| ERECTION PLAN | JOB NO. / DRAWING NO. G1 | ISSUE |

## GENERAL

The following plans are presented as a guide for installation of a your self storage building. These details may not be suitable for all the building designs or conditions.

Throughout these plans, products are specified per Mini Systems recommended use and application of these products. The use of these products should not vary from these recommendations, or should not be applied using another manufacturer's specifications or guidelines. If you have any questions about any of the products and their appropriate applications, please call Mini Systems at 1-888-MY1-MINI (1-888-691-6464).

Prior to installing materials, all dimensions should be verified by field measurements.

All framing members will have a Red Oxide finish unless noted.

Some notching, punching, and coping of secondary framing members may be nessecary in the field.

Use temporary bracing during erection until the roof and wall sheathing is attached. Temporary bracing is not supplied by Mini Systems.

Consult Mini Systems for any additional information not outlined in these plans.

## SAFETY

Study applicable OSHA and other safety requirements before starting construction.
The installation of metal roof and wall systems are dangerous procedures and should be supervised by trained, knowledgeable erectors. Use extreme care while installing panels. It is not possible for Mini Systems to be aware of all the job site situations that could cause an unsafe condition to exist. The erector is responsible for reading these plans and determining the safest way to erect the self storage building.

These plans are provided only as a guide to show a knowledgeable, trained erector the correct parts placement one to another. If any of the following installation steps would endanger a worker, the erector should stop and decide upon a corrective action.

Do not stand on the roof panel at the ends until the roof panel has been attached with fasteners.

## RECEIVING MATERIAL

It is the responsibility of the customer to arrange for unloading of material from the delivery truck or trucks. The customer shall be responsible for arranging suitable equipment for unloading of material from the delivery truck or trucks.

After receiving material, check their condition and review the shipment against the shipping list to ensure all materials are accounted for. If damages or shortages are discovered, it should be noted on the bill of lading at the time of delivery. Mini Systems is not responsible for any damages or shortages unless they are presented within 48 hours of delivery.

## HANDLING

Each bundle should be handled carefully to avoid being damaged. Care should be taken to prevent bending of the panel or abrasion to the finish. Whenever possible, the bundle should remain crated until it is located in its place of storage. If a bundle must be opened, we recommend you recrate them before lifting. To avoid damage, please lift the bundle at its center of gravity.

A forklift may be used for panels up to 20' long. Please make sure the forks are at their maximum separation. Do not transport open bundles across rough terrain, or over a long distance. Some means of supporting the panel load must be used.

A crane should be used when lifting panels with lengths greater that 20'. Please be sure to utilize a spreader bar to ensure the even distribution of the weight to pick up points. As a rule, when lifting panels, no more than 1/3 of the length of the panel should be left unsupported. Never use wire rope because this will damage the panels.

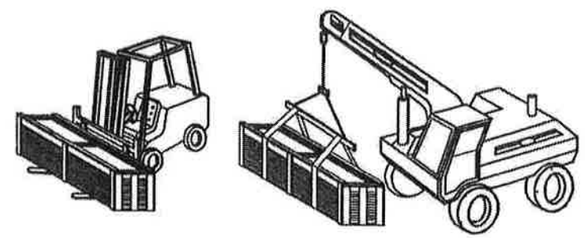

When using unpainted galvalume, care should be taken to prevent staining of the material. Clean gloves should be worn at all times to prevent a reaction with the salts found on bare skin. Installers should wear rubber sole shoes to keep from scuffing material while on the roof.

Handling of individual panels should be done carefully and properly to avoid bending or damaging. A panel should be carried by grasping the edge of the panel so that it is parallel to the ground. The panels should not be carried with the panels perpendicular to the ground as this could cause the panels to buckle or bend in the center.

Normally, individual panels can be handled by people placed every 6' to 8' along the length of the panel.

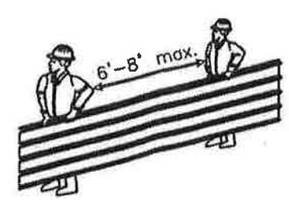


## STORAGE

Please inspect panels for moisture accumulation. If moisture has formed, the panels should be unbundled, wiped dry, and allowed to dry completely. Once dry, carefully restack the panels and loosely recover allowing for ample air circulation.

Bundled sheets should be stored high enough off the ground to allow for air circulation and prevent contact with accumulating water. If possible, elevate one end of the bundle to allow any moisture to run off the panels.

## STORAGE (Cont.)

Mini Systems recommends covering the bundle with a tarpaulin. Do not use tight fitting plastic-type tarpaulins as panel bundle covers. While they may provide protection against heavy downpours, they can also prevent necessary ventilation and trap heat and moisture. If panels are to be stored in possible bad weather, we suggest they be stored inside. Extended storage of panels in a bundle is not recommended. Under no circumstances should the sheets be stored near or come in contact with salt water, corrosive chemicals, ash or fumes generated or released inside the building or from nearby plants, foundries, plating works, kilns, fertilizers, and wet or green lumber.

Bundled purlins should be stored sufficiently enough off the ground to allow air circulation and prevent contact with ponding water. If possible, elevate one end of the bundle to allow any moisture to run off the materials.

Extended storage of purlins in a bundle is not recommended. Under no circumstances should the purlins be exposed or stored near any fertilizers, acids, alkalis, in any corrosive atmosphere, or near any corrosive agents.

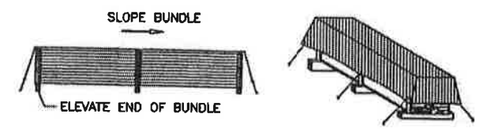


## CORRECT FASTENING METHOD

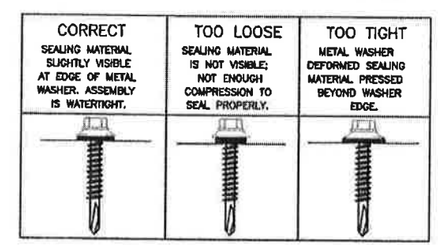


SEE DETAIL PAGES FOR FOR PANEL FASTENER PATTERNS AND CONSTRUCTION DETAILS.

MINI SYSTEMS, INC.
Bus: (888) MY-1-MINI P.O. Box 520
Fax: (888) 748-9504 SARDIS, MS 38666

| | | |
|---|---|---|
| SCALE: NONE | APPROVED BY: | DRAWN BY: tc |
| DATE: 6-3-13 | Tracy Crutcher | REVISED: |
| Tom Pavlik<br>MILTON, WI | 40'-0" x 240'-0" x 8'-6" Mini Storage | |
| ERECTION PLAN | JOB NO. / DRAWING NO. G2 | ISSUE |

# FRAMING MEMBERS

EAVE CHANNEL
PART: EC**

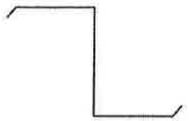

ZEE PURLIN
PART: P**

CEE POST
PART: PC** / G** / DH** / JB**

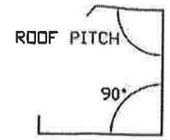


EAVE STRUT
Part: ES**

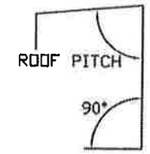


RIDGE PURLIN
Part: RP**

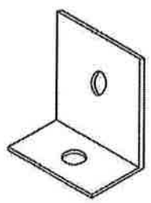

BASE CLIP
Part: MS136
12 ga. GALVANIZED

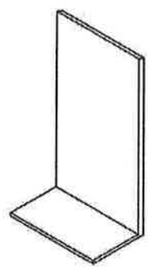

GIRT/HEADER CLIP
Part: HW276
14 ga. GALVANIZED

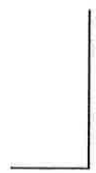

4" x 2" ANGLE
Part: RA**

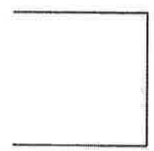

2" x 2" x 2" OFC
Part: PA**

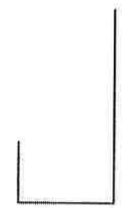

3" x 3" x 2" BASE CHANNEL
Part: BC**

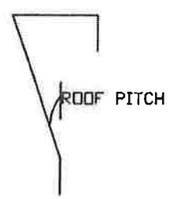


PITCH MAKER
PART: PM
16 ga.
0'-4" LONG

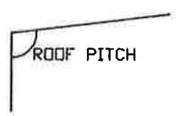


4" x 2" ANGLE
Part: SA**
14 ga.

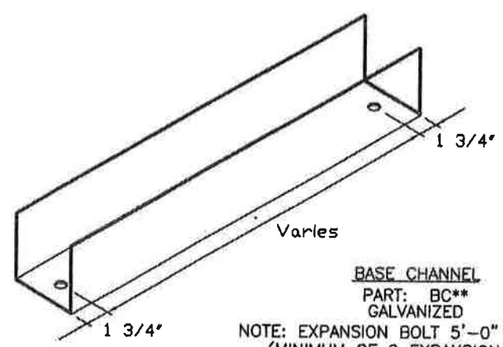


BASE CHANNEL
PART: BC**
GALVANIZED
NOTE: EXPANSION BOLT 5'-0" MAX. O.C.
(MINIMUM OF 2 EXPANSION BOLTS
PER PIECE OF BASE CHANNEL)

# FASTENERS

## ROOF PANEL (NON-STANDING SEAM)

#14x7/8" SELF DRILLING
LAP TEK
5/16" HEAD
w/Washer

☐ RLF-2
CARBON STEEL

☒ RLF-1 (STANDARD)
LONG LIFE

#12-14x1 1/4" SELF DRILLING
5/16" HEAD
w/Washer
Insulation- up to 4" thick

☐ RSF-3
CARBON STEEL

☒ RSF-4 (STANDARD)
LONG LIFE

## WALL PANEL

#14x7/8" SELF DRILLING
LAP TEK
5/16" HEAD
w/Washer

☒ WLF-2 (STANDARD)
CARBON STEEL

☐ WLF-1 (DELUXE)
LONG LIFE
USE WITH KYNAR PANELS ONLY

#12-14x1 1/4" SELF DRILLING
5/16" HEAD
w/Washer
Insulation- up to 4" thick

☒ WSF-3 (STANDARD)
CARBON STEEL

☐ WSF-4 (DELUXE)
LONG LIFE
USE WITH KYNAR PANELS ONLY

## TRIM

#14x7/8" SELF DRILLING
LAP TEK
5/16" HEAD
w/Washer

☒ TLF-2 (STANDARD)
CARBON STEEL

☐ TLF-1 (DELUXE)
LONG LIFE
USE WITH KYNAR TRIMS ONLY

#12-14x1 1/4" SELF DRILLING
5/16" HEAD
w/Washer
Insulation- up to 6" thick

☒ TSF-3 (STANDARD)
CARBON STEEL

☐ TSF-4 (DELUXE)
LONG LIFE
USE WITH KYNAR TRIMS ONLY

#8x5/8" SELF DRILLING
CARBON STEEL
w/o Washer
1/4" HEAD

☒ TSF-5

## LINER

#8x5/8" SELF DRILLING
CARBON STEEL
w/o Washer
1/4" HEAD

☒ LSF-1

## FRAMING

#12-14X3/4"
CARBON STEEL
w/o Washer
5/16" HEAD

☒ FSF-1

## MISC.

☒ POP RIVET
1/8" x 3/16"
Stainless Steel, Painted

# ACCESSORIES

ANCHOR BOLT
(1/2" x 2 3/4")

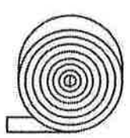

TAPE SEALANT
(1/2" x 3/32" x 50')

TUBE CAULK
10.3 oz. (GRAY)

PBR-PANEL INSIDE CLOSURE
(1" x 3'-0") Synthetic Rubber

PBR-PANEL OUTSIDE CLOSURE
(1" x 3'-0") Synthetic Rubber


MINI SYSTEMS, INC.

Bus: (888) MY-1-MINI P.O. Box 520
Fax: (888) 748-9504 SARDIS, MS 38666


| | | |
|---|---|---|
| SCALE: NONE | APPROVED BY: Tracy Crutcher | DRAWN BY: tc |
| DATE: 6-3-13 | | REVISED: |
| Tom Pavlik<br>MILTON, WI | 40'-0" x 240'-0" x 8'-6" Mini Storage | |
| ERECTION PLAN | JOB NO. | DRAWING NO. G3 / ISSUE |

GUTTER OVERFLOW - FIELD NOTCH @ 10'-0" O.C.
GUTTER OVERFLOW IS NOT REQUIRED WHEN IT FALLS AT DOWNSPOUT LOCATION

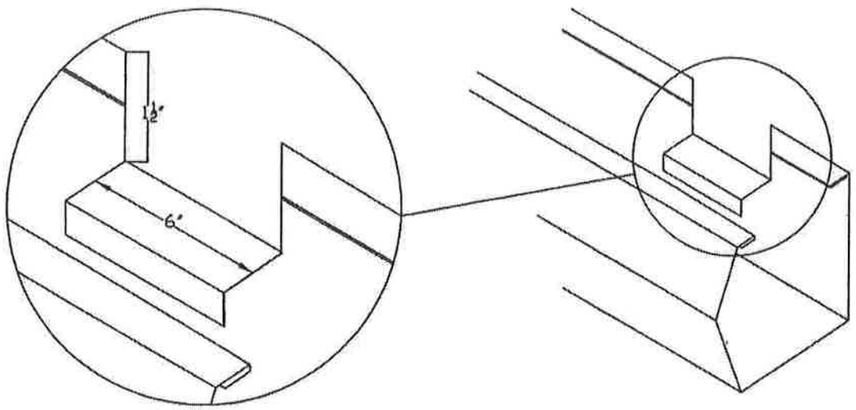


T / D16 OPTIONAL GUTTER OVERFLOW DETAIL

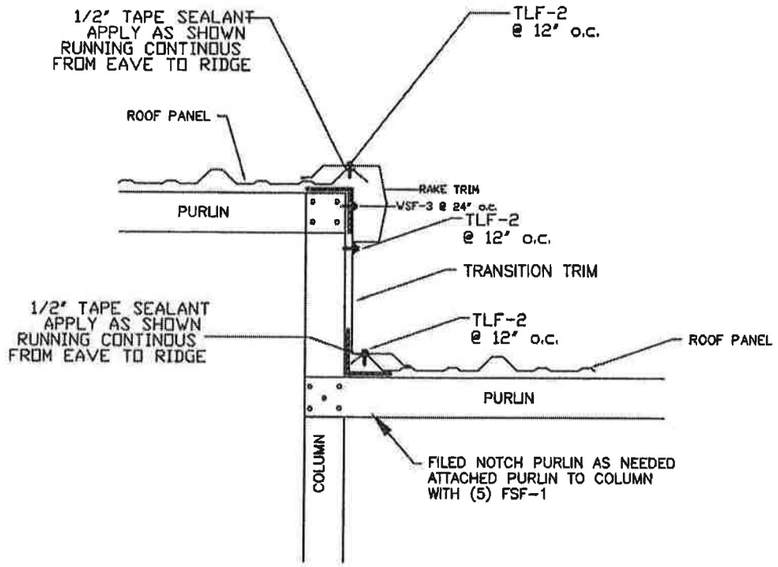


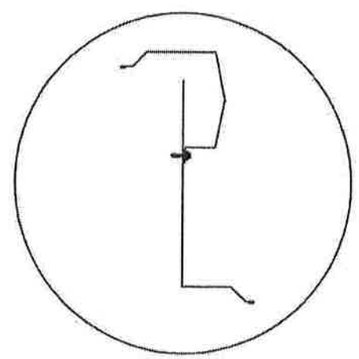

T / D17 STEP DOWN RAKE DETAIL
TO TRANSITION TRIM

T4

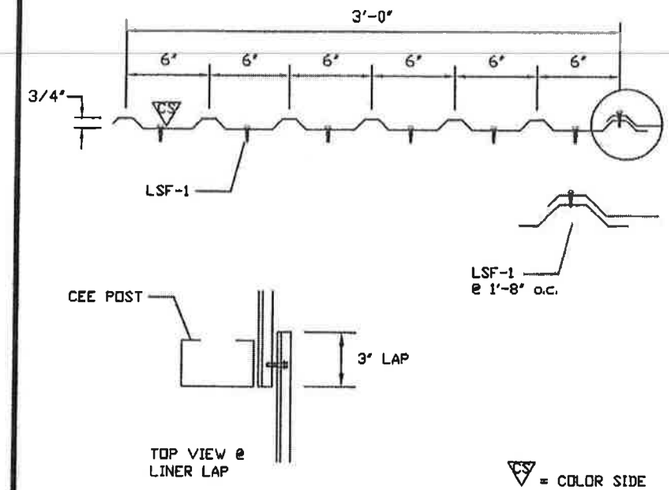


PARTITION ANGLES ARE FASTENED 6" o.c. WITH LSF-1.

BUILDING OVER 45' WIDE WILL HAVE MULTIPLE PARTITON PANELS. BUILDINGS UNDER 45' WILL BE ONE PIECE PARTITION PANELS.

P/D1 "PBU" LINER PANEL FASTENER PATTERN

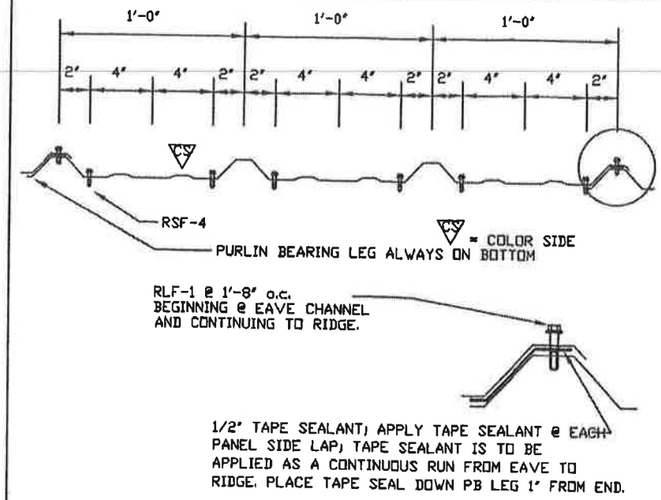


SEE P/D3 FOR INTERMEDIATE PURLIN FASTENERS

TO BE USED WITH WIND ZONES UNDER 110 MPH

P/D2 "PBR" ROOF PANEL FASTENER LOCATION EAVE, ENDLAP & RIDGE PURLIN

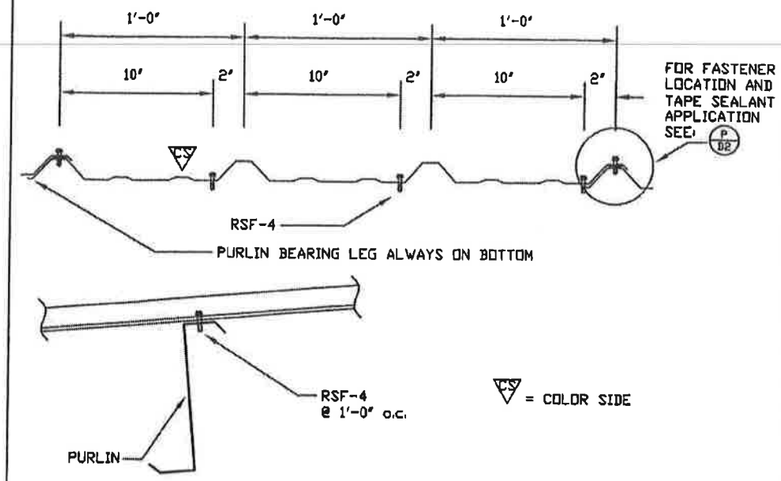


TO BE USED WITH WIND ZONES UNDER 110 MPH

P/D3 "PBR" ROOF PANEL FASTENER PATTERN @ INTERMEDIATE PURLINS

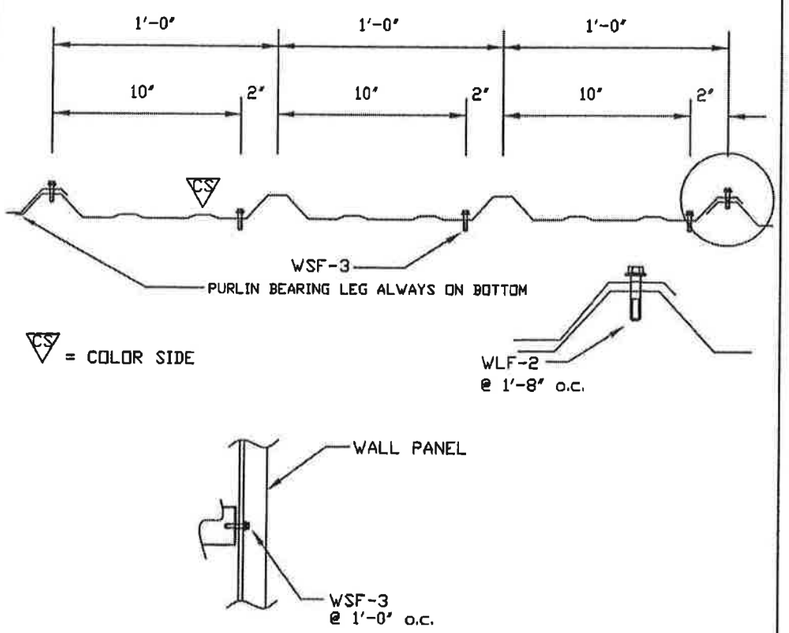


P/D4 "PBR" WALL PANEL FASTENER PATTERN

## DRAWING INDEX

| DESCRIPTION | PAGE | | | | | | | | | | ISSUE |
|---|---|---|---|---|---|---|---|---|---|---|---|
| DESIGN LOADS | D1 | D2 | | | | | | | | | 0 |
| GENERAL NOTES | G1 | G2 | G3 | | | | | | | | 0 |
| FOUNDATION PLAN | F1 | | | | | | | | | | 0 |
| UNIT LAYOUT | U1 | | | | | | | | | | 0 |
| FLOOR COLUMN LAYOUT | E1 | | | | | | | | | | 0 |
| ROOF FRAMING PLAN | E2 | | | | | | | | | | 0 |
| SIDEWALL ELEVATIONS | E3 | | | | | | | | | | 0 |
| ENDWALL ELEVATIONS | E4 | | | | | | | | | | 0 |
| SIDEWALL SHEETING ELEVATIONS | E5 | | | | | | | | | | 0 |
| ENDWALL SHEETING ELEVATIONS | E4 | | | | | | | | | | 0 |
| STRUCTURAL DETAILS | S1 | S2 | S3 | S4 | S5 | S6 | | | | | 0 |
| TRIM DETAILS | T1 | T2 | T3 | T4 | | | | | | | 0 |
| PANEL DETAILS | P1 | | | | | | | | | | 0 |
| | | | | | | | | | | | 0 |
| | | | | | | | | | | | 0 |


MINI SYSTEMS, INC.

Bus: (888) MY-1-MINI P.O. Box 520
Fax: (888) 748-9504 SARDIS, MS 38666


| | | |
|---|---|---|
| SCALE: NONE<br>DATE: 6-3-13 | APPROVED BY:<br>Tracy Crutcher | DRAWN BY: tc<br>REVISED: |
| Tom Pavlik<br>MILTON, WI | 40'-0" x 240'-0" x 8'-6" Mini Storage | |
| ERECTION PLAN | JOB NO. | DRAWING NO. U1 / ISSUE |

## BUILDING DESCRIPTION:

| WIDTH: | | LENGTH: | | EVE HEIGHT: | ROOF PITCH |
|---|---|---|---|---|---|
| 40' | x | 240" | x | 9'-6" | 1/2:12 |

## DESIGN LOADS

| | | |
|---|---|---|
| BUILDING CODE: | WISC-2002 | |
| DEAD LOAD: | 2.50 | PSF |
| ROOF LIVE LOAD: | 20.00 | PSF |
| COLLATERAL LOAD: | 0.00 | PSF |
| GROUND SNOW LOAD: | 42 | PSF |
| ROOF SNOW LOAD: | 30 | PSF |
| WIND LOAD: | 90 | MPH |
| WIND EXPOSURE: | C | |

## DESIGN DATA:

SEISMIC DESIGN CATEGORY: D

BASIC SEISMIC FORCE RESISTING SYSTEM: Light framed walls with shear panels of all other materials

DESIGN SPECTRAL ACCEIRATION: S ds =S ms * 2/3 = 0.139
S d1 =S m1 * 2/3 = 0.083

SITE CLASSIFICATION: "D" : Shear Wave Velocity 600 to 1200 ft/sec

GROUND MOTION: S s = 0.130 g. 0.2 sec response
S 1 = 0.052 g. 1.0 sec response

MINI SYSTEMS, INC.
Bus: (888) MY-1-MINI P.O. Box 520
Fax: (888) 748-9504 SARDIS, MS 38666

| | | |
|---|---|---|
| SCALE: NONE | APPROVED BY: Tracy Crutcher | DRAWN BY: tc |
| DATE: 6-3-13 | | REVISED: |
| Tom Pavlik MILTON, WI | 40'-0" x 240'-0" x 9'-6" Mini Storage | |
| ERECTION PLAN | JOB NO. | DRAWING NO. D1 / ISSUE |

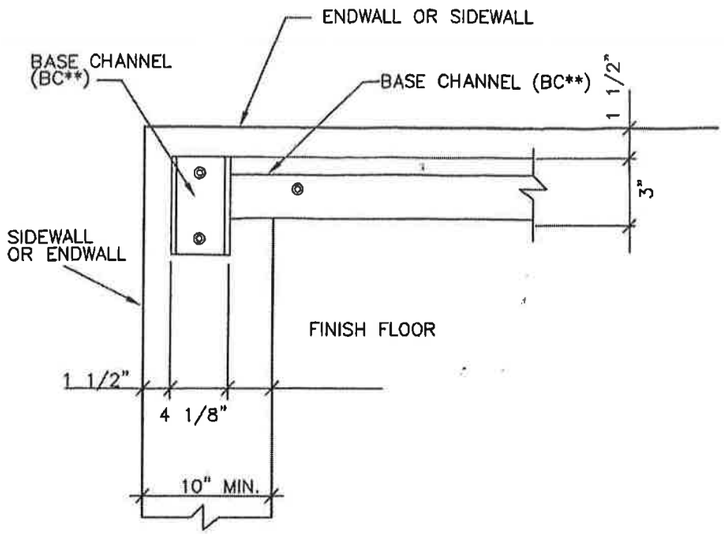


S/D1 BASE CHANNEL DETAIL AT CORNERS

SEE FLOOR PLAN FOR DOOR LOCATION TO DETERMINE SIDEWALL OR ENDWALL LOCATION FOR BASE CHANNEL.

BASE CHANNEL TO BE INSET 1 1/2" FROM EDGE OF CONCRETE.

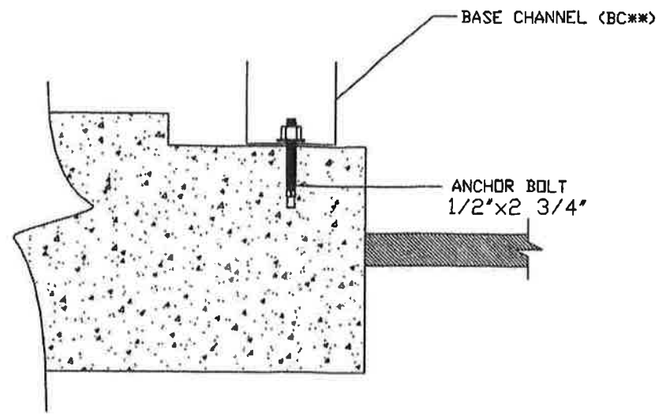


S/D2 BASE CHANNEL DETAIL BETWEEN DOOR OPENINGS

ANCHOR BOLTS SHOULD BE A MINIMUM OF 2 PER PIECE OR 60" o.c. MAX. BC** TO BE SPACED EVENLY BOTH SIDES OF GRID LINE AT DOORWAY. SEE 1/D6

BASE CHANNEL TO BE INSET 1 1/2" FROM EDGE OF CONCRETE.

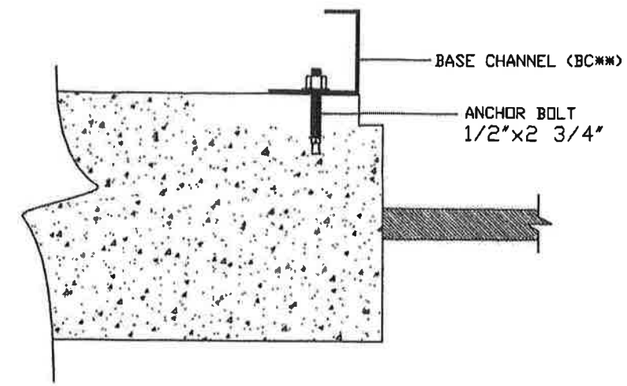


S/D3 BASE CHANNEL DETAIL @ SHEETED WALLS

ANCHOR BOLTS SHOULD BE A MINIMUM OF 2 PER PIECE OR 60" ON CENTER MAX. SEE DETAIL 1/D7 FOR CEE POST ATTACHMENT IF NEEDED.

BASE CHANNEL TO BE INSET 1 1/2" FROM EDGE OF CONCRETE.

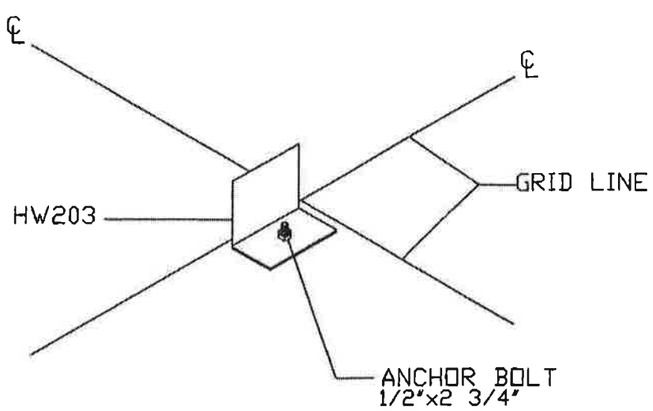


S/D4 BASE CLIP DETAIL FOR INTERIOR POST

FASTEN BASE CLIP WITH 1 ANCHOR BOLT TO CONCRETE SLAB. PLACE BASE CLIP ON SAME SIDE ON GRID LINE ON EACH COLUMN LINE UP TO CENTER OF BUILDING. OTHER SIDE WILL BE OPPSITE HAND. SEE DETAIL 1/D8 FOR CEE POST ATTACHMENT.

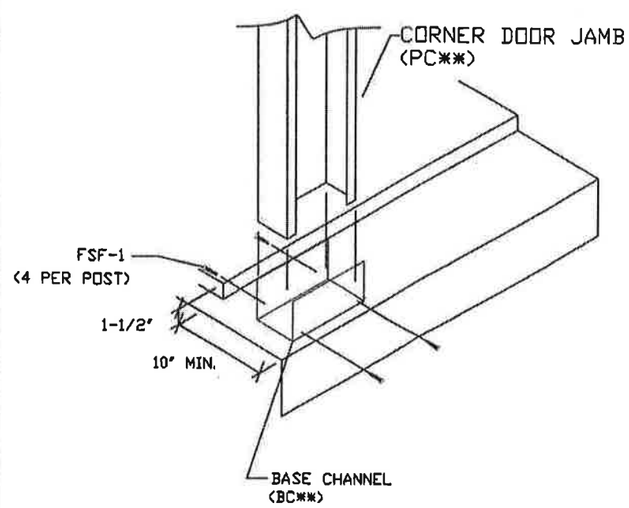


S/D5 CORNER DOOR JAMB CEE POST TO BASE CHANNEL

S1

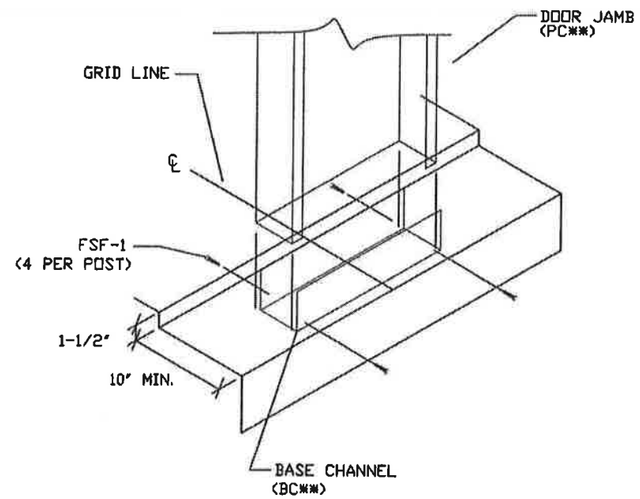


NOTE: FSF-1 #12-14 x 3/4" ON BACKSIDE INSET 3" EACH SIDE TO ALLOW FOR DOOR TRACK

S/D6 DOOR JAMB CEE POST TO BASE CHANNEL

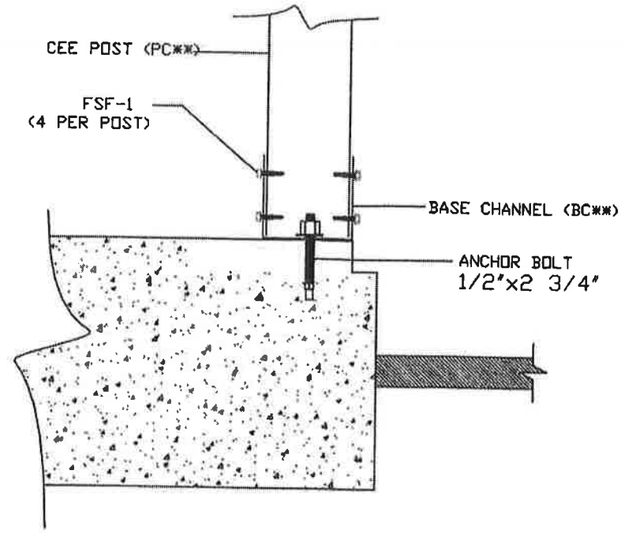


S/D7 CEE POST ATTACHMENT TO BASE CHANNEL @ SOLID SHEETED WALLS

SEE FLOOR PLAN DRAWING FOR POSTITION OF CEE POST.
PLACE CEE POST INTO POSITION AND FASTEN WITH (4) FSF-1 FASTENERS.
(CEE POST MAY NOT BE REQIURED IN ALL LOCATIONS WHICH HAVE BASE CHANNEL.)

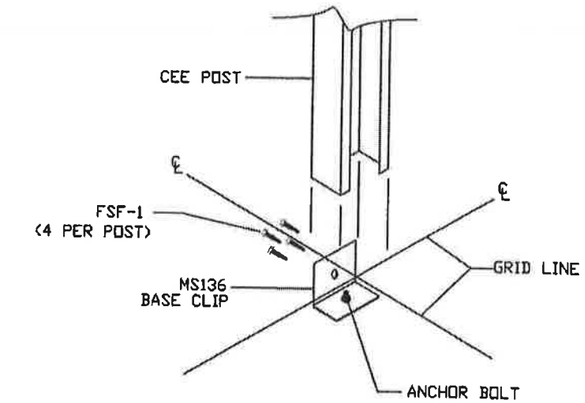


S/D8 INTERIOR POST @ BASE

SEE FLOOR PLAN DRAWING FOR POSTITION OF CEE POST.
PLACE CEE POST INTO POSITION AND FASTEN WITH (4) FSF-1 FASTENERS.

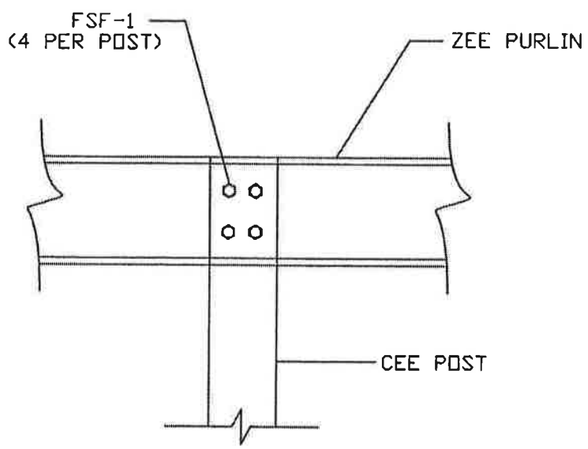


S/D9 PURLIN TO POST DETAIL

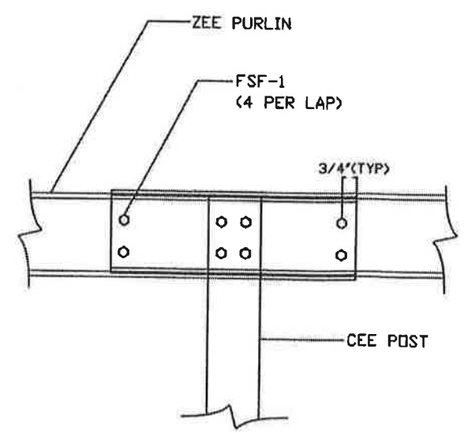


S/D10 PURLIN LAP DETAIL

SEE ROOF FRAMING PLAN
FOR PURLIN LAP DIMENSIONS

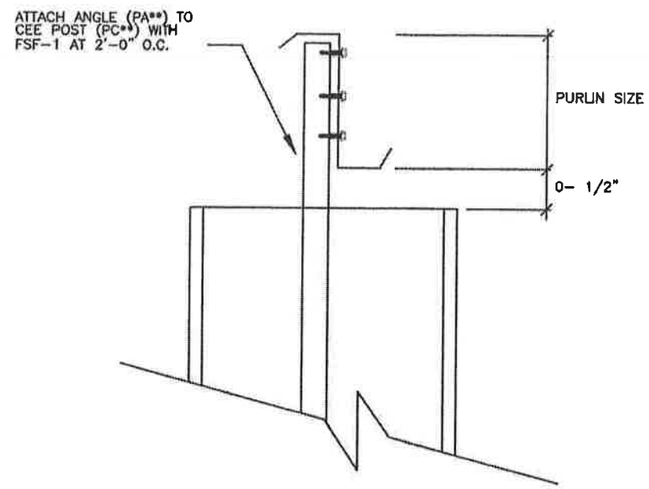


S/D11 PURLIN TO ANGEL DETAIL AT ENDWALL WITH DOORS

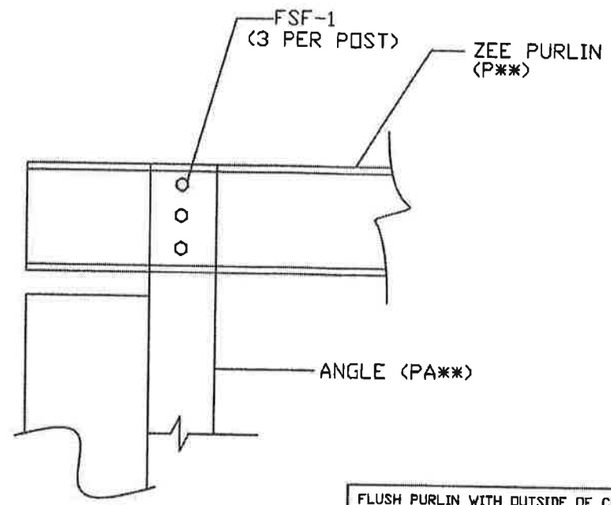


FLUSH PURLIN WITH OUTSIDE OF CEE POST.

S/D12 PURLIN TO ANGEL DETAIL AT ENDWALL WITH DOORS

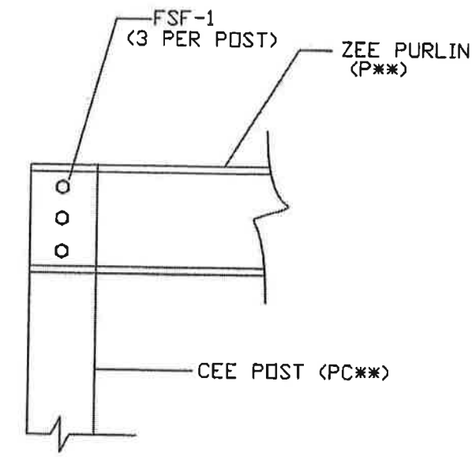


FLUSH PURLIN WITH OUTSIDE OF CEE POST.

S/D13 PURLIN TO CEE POST DETAIL AT ENDWALL WITHOUT DOORS

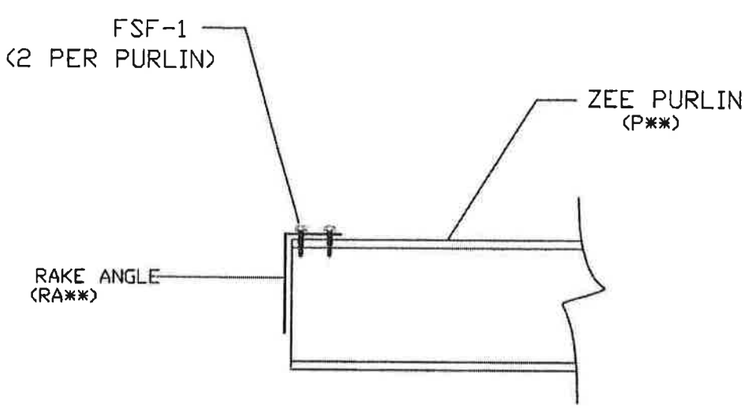


RUN LONG LEG OF RAKE ANGLE DOWN WALL SIDE.

S/D14 RAKE ANGLE TO PURLIN

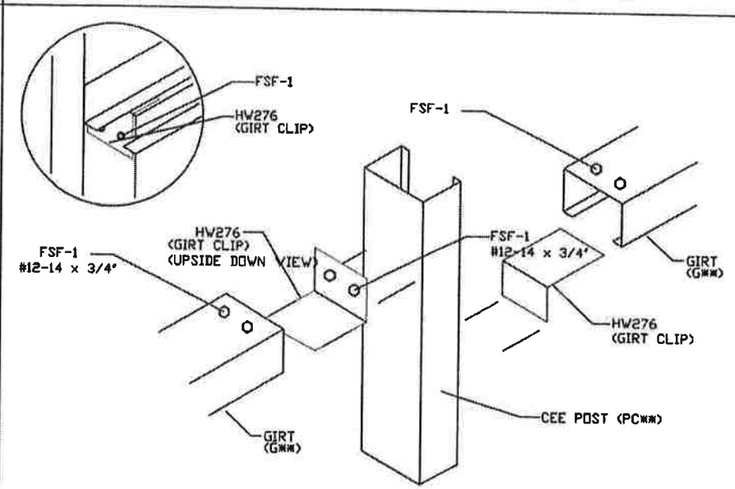


FASTEN HW276 TO CEE POST WITH (2) FSF-1 AND THE GIRT WITH (2) FSF-1.

S/D15 GIRT ATTACHMENT CLIP LOCATION FOR SOLID SHEETED WALLS

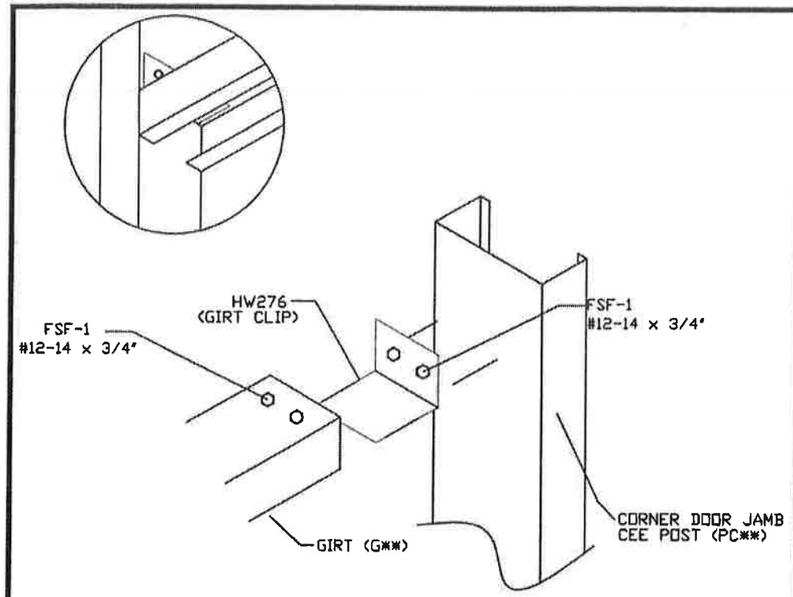


FASTEN HW276 TO CEE POST WITH (2) FSF-1 AND THE GIRT WITH (2) FSF-1. FLUSH OUTSIDE OF GIRT WITH OUTSIDE OF CEE POST.

S/D16 GIRT ATTACHMENT TO CORNER CEE POST

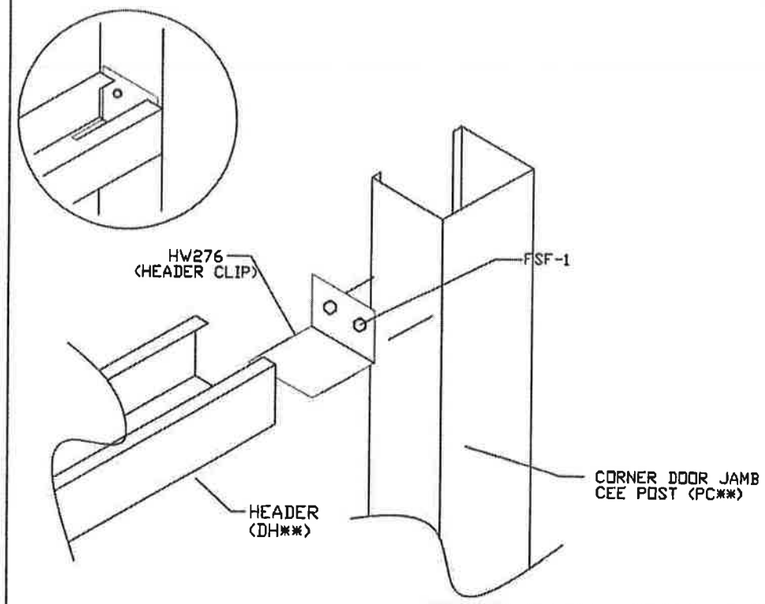


FASTEN HW276 TO CEE POST WITH (2) FSF-1 AND THE GIRT WITH (2) FSF-1. FLUSH INSIDE OF GIRT WITH INSIDE OF CEE POST.
SEE DETAIL 3/T3 BEFORE INSTALLING HEADERS.

S/D17 HEADER ATTACHMENT TO CORNER CEE POST

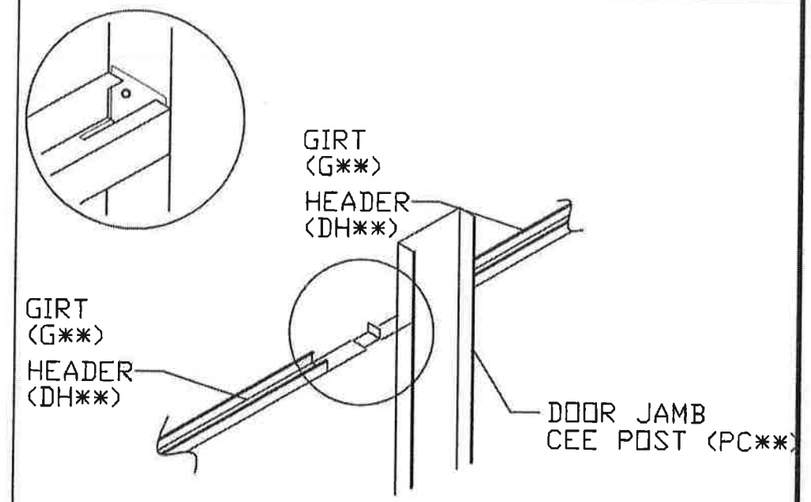


FASTEN HW276 TO CEE POST WITH (2) FSF-1 AND THE GIRT WITH (2) FSF-1. FLUSH INSIDE OF GIRT WITH INSIDE OF CEE POST.
SEE DETAIL T/D1 AND T/D4 BEFORE INSTALLING HEADERS OR GIRTS.

S/D18 HEADER OR GIRT ATTACHMENT AT DOOR JAMB CEE POST

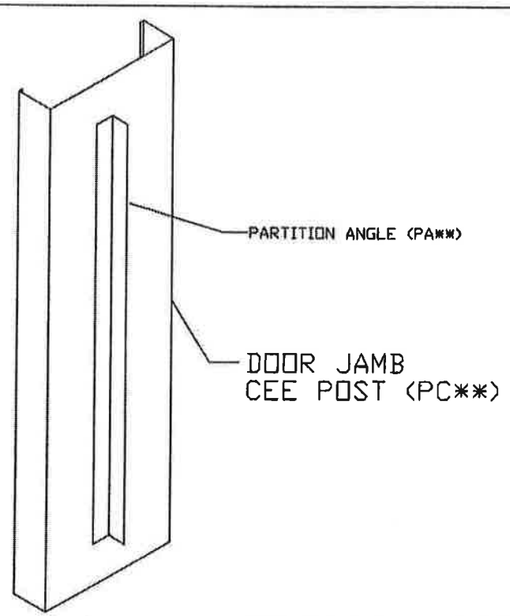


FASTEN PARTITION ANGLE TO CEE POST WITH FSF-1 12" o.c.
THIS IS EASIER IF DONE BEFORE STANDING THE CEE POST. ANGLE TO BE INSET 6" FROM ONE SIDE AND 3 ½" FROM FLOOR.

S/D19 ATTACHING PA** TO SIDEWALL DOOR JAMB CEE POST

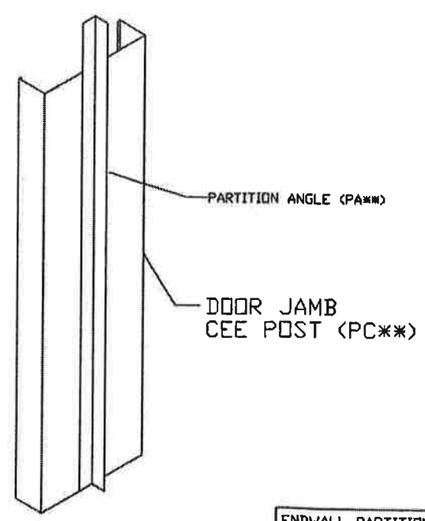


ENDWALL PARTITION ANGLES WILL GO PAST THE TOP OF DOOR JAMB CEE POST BY THE PURLIN DEPTH PLUS ½".

FASTEN PARTITION ANGLE TO CEE POST WITH FSF-1 12" o.c.
THIS IS EASIER IF DONE BEFORE STANDING THE CEE POST. ANGLE TO BE INSET 6" FROM ONE SIDE AND FLUSH WITH FLOOR.

S/D20 ATTACHING PA** TO ENDWALL DOOR JAMB CEE POST

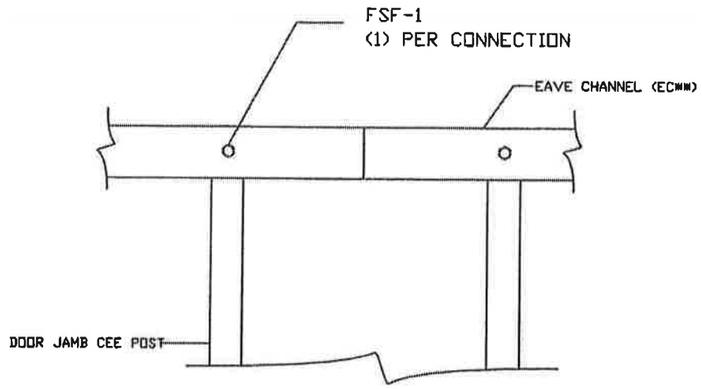


S/D21 EAVE CHANNEL CONNECTION
FRONT VIEW @ LAP
ON SIDEWALL

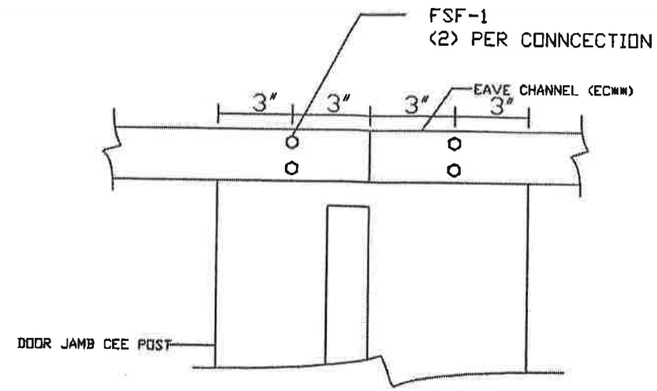


S/D22 EAVE CHANNEL CONNECTION
BACK VIEW @ LAP
ON SIDEWALL

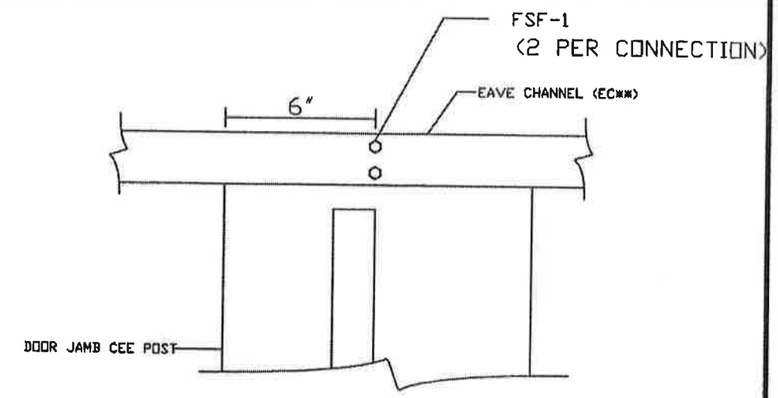


S/D23 EAVE CHANNEL CONNECTION
DOOR JAMB CEE POST
ON SIDEWALL

SEE DETAIL 2/D21 FOR FRONT VIEW AND ATTACHMENT.

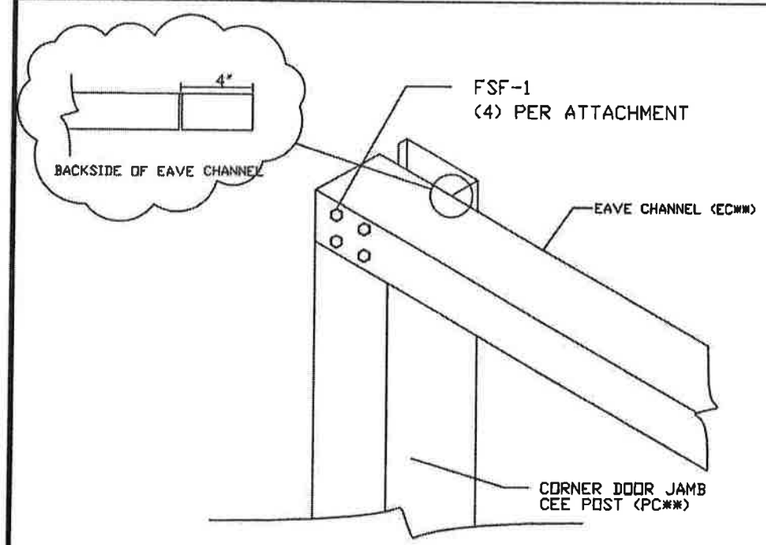


S/D24 EAVE CHANNEL AT CORNER
WITH DOOR ON ENDWALL

FIELD NOTCH BACKSIDE OF EAVE CHANNEL TO CAP CORNER CEE POST.

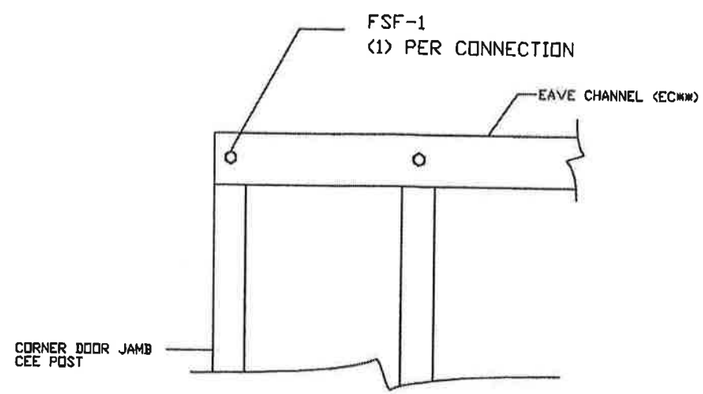


S/D25 EAVE CHANNEL AT CORNER
WITH DOOR ON SIDEWALL
FRONT VIEW

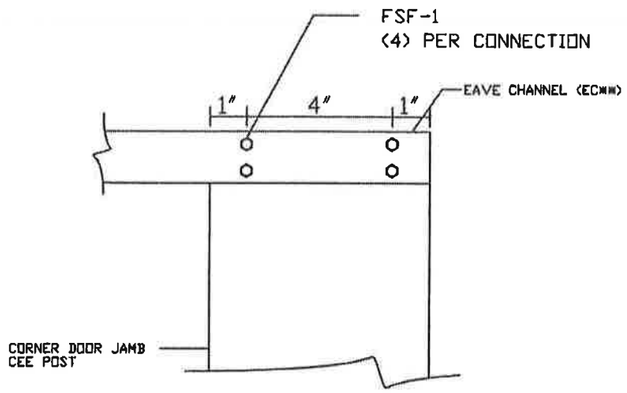


S
D26
EAVE CHANNEL AT CORNER
WITH DOOR ON SIDEWALL
BACK VIEW

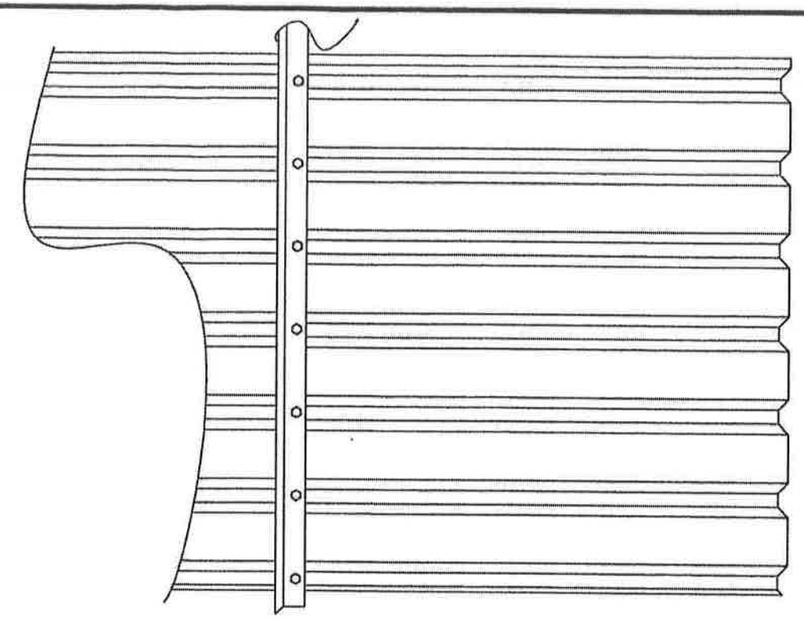

S
D27
PARTITION ANGLE CONNECTION
TO PARTITION PANELS

PARTITION ANGLES ARE FASTENED 6" o.c.
WITH LSF-1.

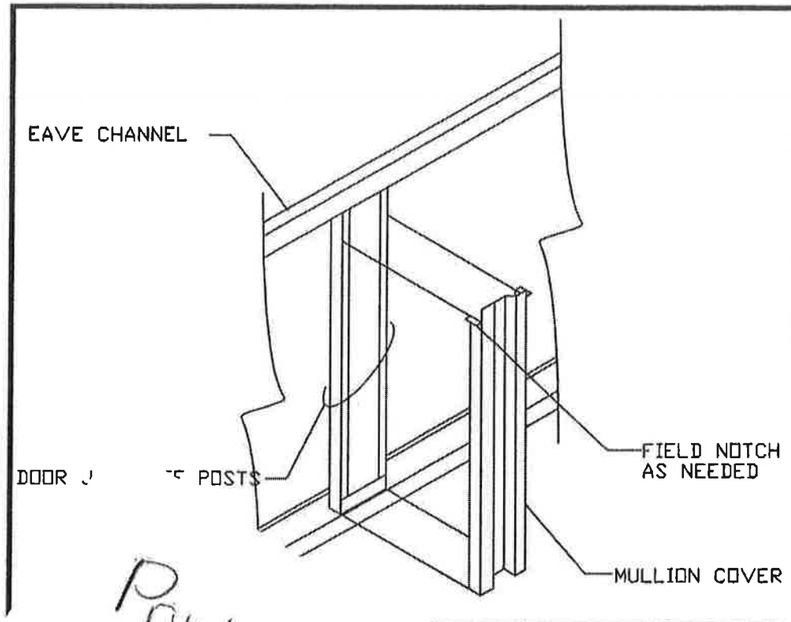


Prints From Dale

IMENT

FASTEN WITH TSF-5 24" o.c., STARTING 6" FROM THE FLOOR.INSET FASTENERS 1" FROM BACKSIDE OF DOOR JAMB CEE POST. PLACE (1) TSF-5 CENTER OF MULLION AT BASE.

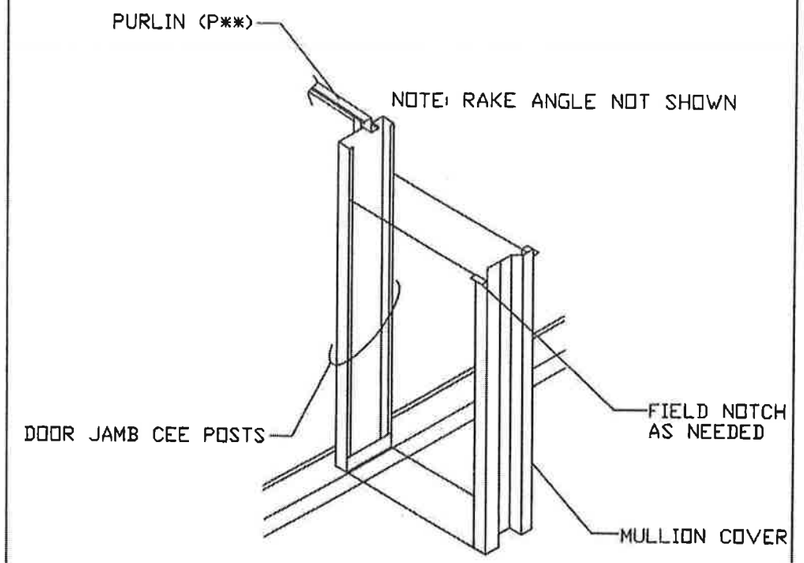


T/D2 MULLION COVER ATTACHMENT
DOOR JAMB CEE POST
ON ENDWALL

FASTEN WITH TSF-5 24" o.c., STARTING 6" FROM THE FLOOR.INSET FASTENERS 1" FROM BACKSIDE OF DOOR JAMB CEE POST. PLACE (1) TSF-5 CENTER OF MULLION AT BASE.

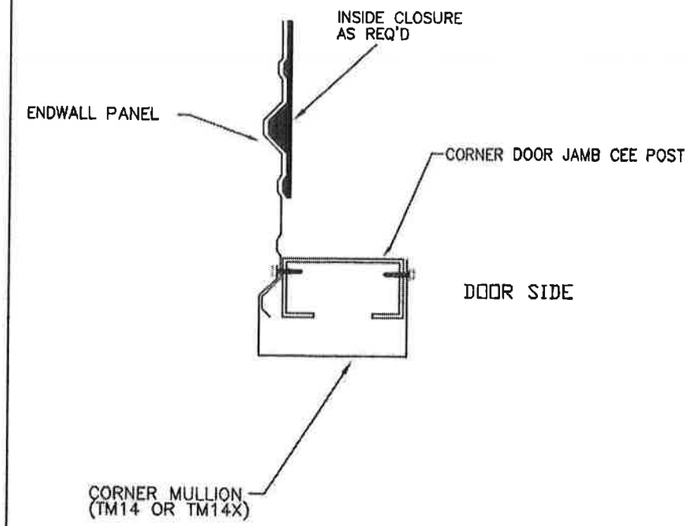


T/D3 CORNER TRIM ATTACHMENT
WITH DOOR

FASTEN WITH TSF-5 24" o.c., STARTING 6" FROM THE FLOOR BOTH SIDES. INSET FASTENERS 1" FROM BACKSIDE OF CEE POST ON DOOR SIDE AND FASTEN INTO SHORT LEG ON PANEL SIDE.

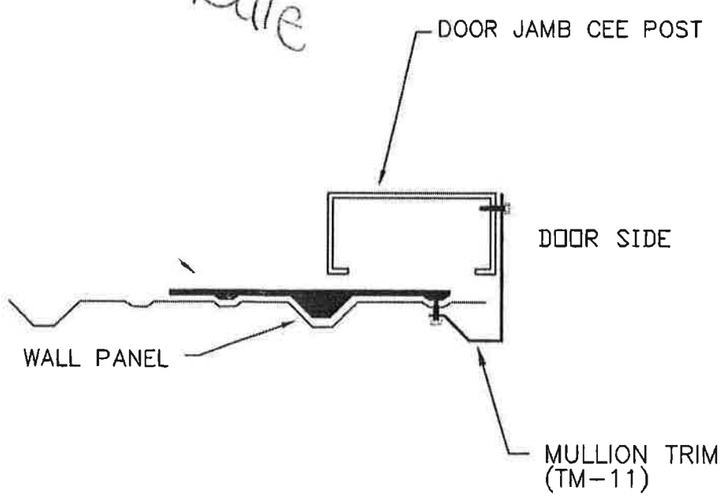


T/D4 MULLION TRIM ATTACHMENT
WITH DOOR

FASTEN WITH TSF-5 24" o.c., STARTING 6" FROM THE FLOOR BOTH SIDES. INSET FASTENERS 1" FROM BACKSIDE OF CEE POST ON DOOR SIDE AND FASTEN INTO SHORT LEG ON PANEL SIDE.

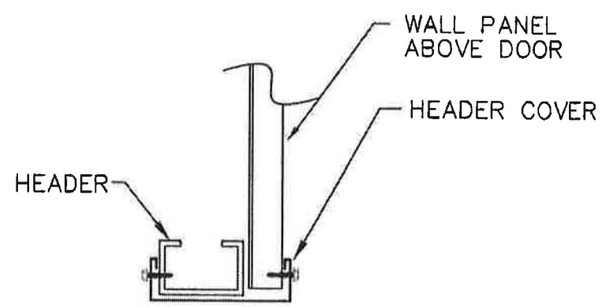


NOTE: FASTEN WITH TSF-5 TO EVERY OTHER HIGH RIB ON FRONT SIDE AND A MINIMUM OF (2) TSF-5 ON BACKSIDE

T/D5 HEADER COVER ATTACHMENT

FASTEN WITH TSF-5 TO PANEL HIGH RIBS (1) TO EACH END AND 24" o.c. IN BETWEEN. ON BACKSIDE FASTEN A MINIMUM OF (2) UNDER 7' , (3) UNDER 12 AND (4) ANY HEADER COVER OVER THAT IN LENGTH.

T1

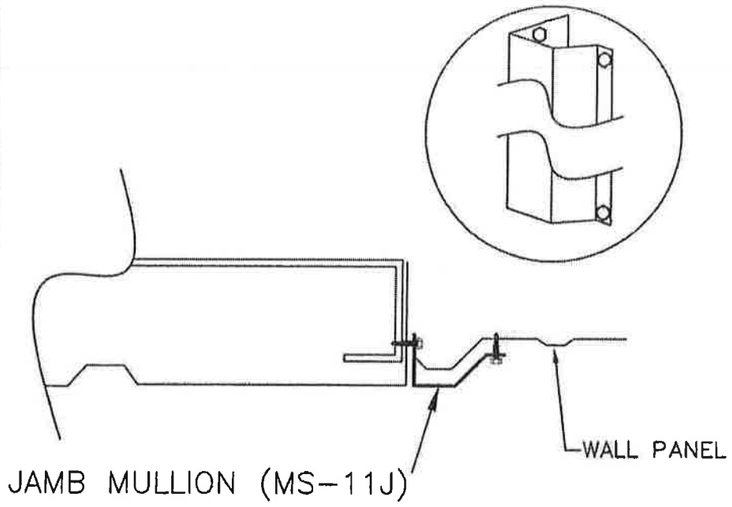


FASTEN TO MULLION COVER WITH (2)TSF-5 & INTO PANEL WITH (2) TSF-5. (1) AT TOP & (1) AT BOTTOM OF MS11J. FIELD CUT HIGH RIB ON PANELS FOR A BETTER FIT BEHIND MS11J. MS11J OVER 60" MAY REQUIRED (3) TSF-5.

T/D6 MULLION TRIM ATTACHMENT BETWEEN DOORS

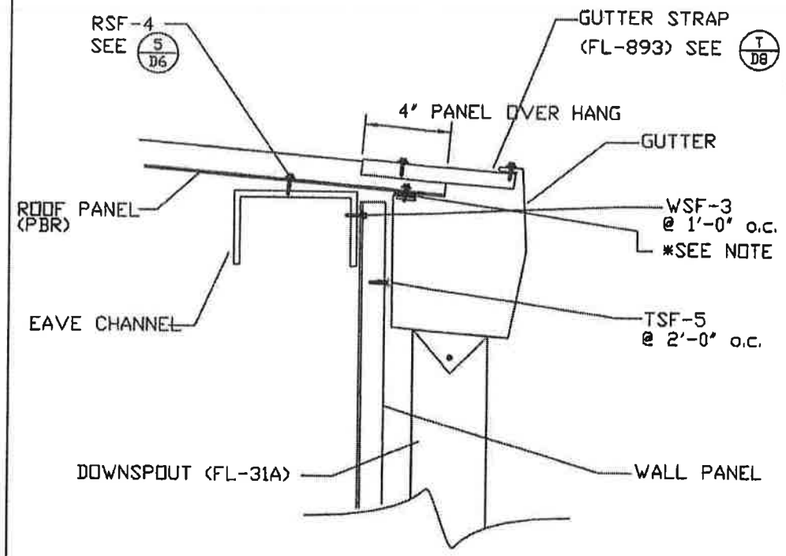


T/D7 GUTTER DETAIL

*PLACE INSIDE CLOSURE BETWWEN GUTTER LEG AND ROOF PANEL. SEE DETAIL D8 PATTERN

ATTACH GUTTER STRAP(FL-893) TO GUTTER WITH (1)TLF-2 AND THEN ATTACH TO ROOF PANEL WITH (2) RLF-1. SPACE GUTTER STRAPS @ 3'-0" o.c.
ATTACH GUTTER TO ROOF PANEL WITH (1) RLF-1 @ 1'-0 o.c. PLACE TAPE SEAL BETWEEN GUTTER STRAP AND ROOF PANEL.

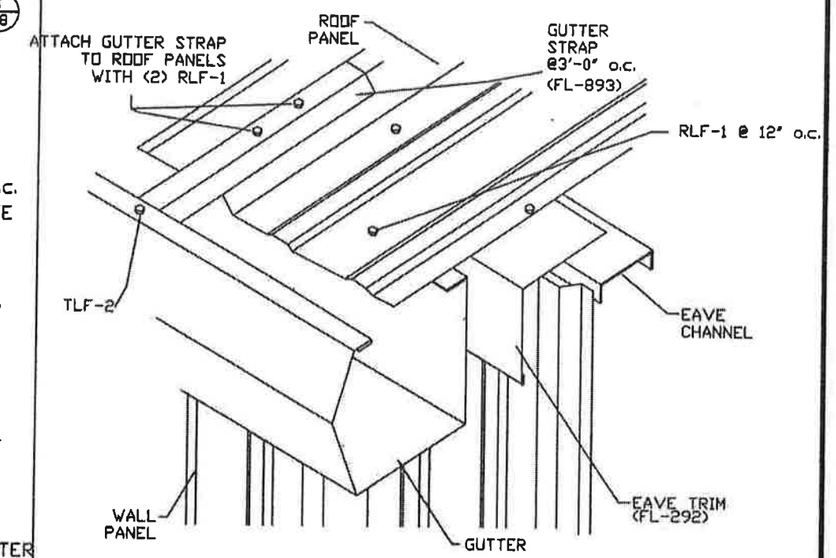


T/D8 GUTTER STRAP DETAIL

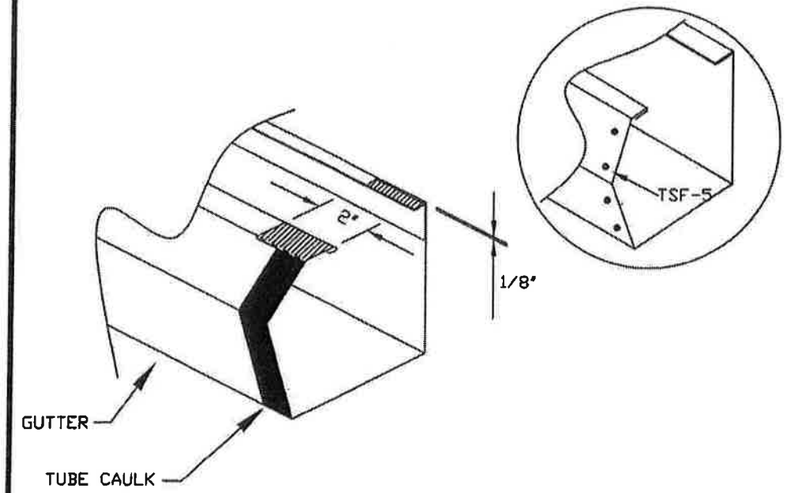


1. Before lapping gutter - field trim, as shown, (1) end.
2. Apply a bead of tube caulk - following gutter profile.
3. Lap field modified end into next peice
4. After lapping 2" - fasten together using (4) TSF-5.

T/D9 GUTTER ENDLAP DETAIL

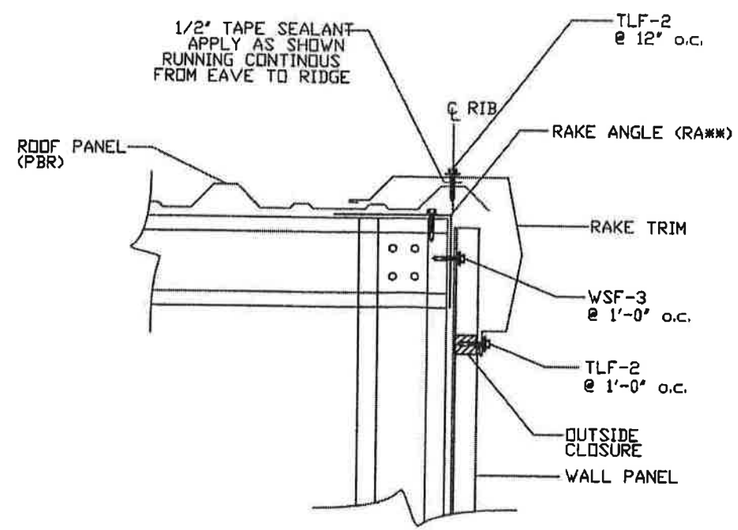


T/D10 RAKE DETAIL

T2

APPLY TUBE CAULK AND INSTALL AN ENDCAP IN THE END OF A SECTION OF GUTTER AND FASTEN w/ (4) TSF-5. POSITION THE GUTTER AND RAKE TRIM ALLOWING A MINIMUM OF 2" OVERLAP w/ THE CORNER BOX. THE CORNER BOX LAPS OVER THE GUTTER AND UNDER THE RAKE TRIM. ALIGN THE CORNER BOX FOR GOOD APPEARANCE AND FASTEN WITH TSF-5. SEAL CONNECTION w/ TUBE CAULK, CLOSURE AND TAPE SEALANT AS SHOWN.

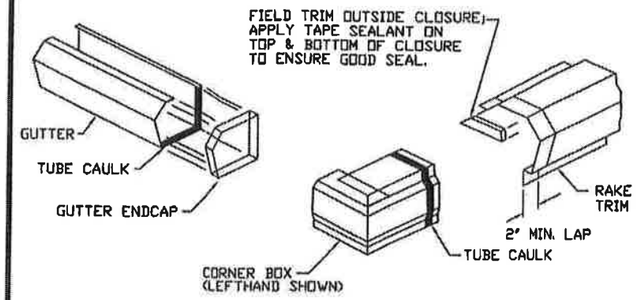


MINI SYSTEMS PRODUCES VARIOUS TRIM PROFILES. THE EXAMPLES SHOWN MAY NOT MATCH BUILDING IN QUESTION.

T/D11 CORNER BOX DETAIL

FIELD CUT AND BEND DOWNSPOUT OUTLET IN BOTTOM OF GUTTER AS INDICATED BELOW

A. LAY OUT WORKPOINTS TO MATCH DOWNSPOUT PROVIDED AS SHOWN BELOW.
B. DRILL STARTER HOLE FOR NIBBLER.
C. CUT DOTTED LINES WITH NIBBLER. TAKE CARE TO STOP CUTS AT WORK POINTS
D. BEND (4) TABS DOWN 90°
E. ATTACH DOWNSPOUT TO GUTTER W/(2) TLF-2

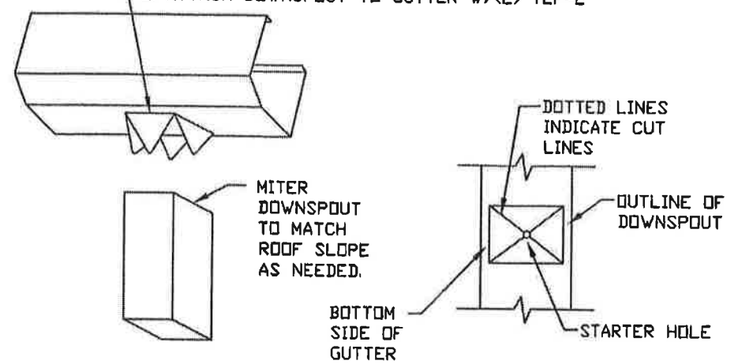


T/D12 DOWNSPOUT TO GUTTER CONNECTION

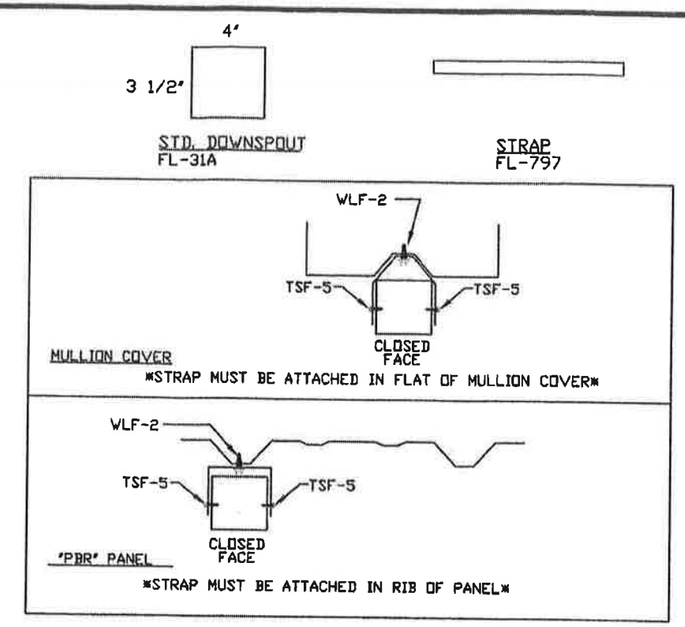


T/D13 DOWNSPOUT TO WALL PANEL DETAIL

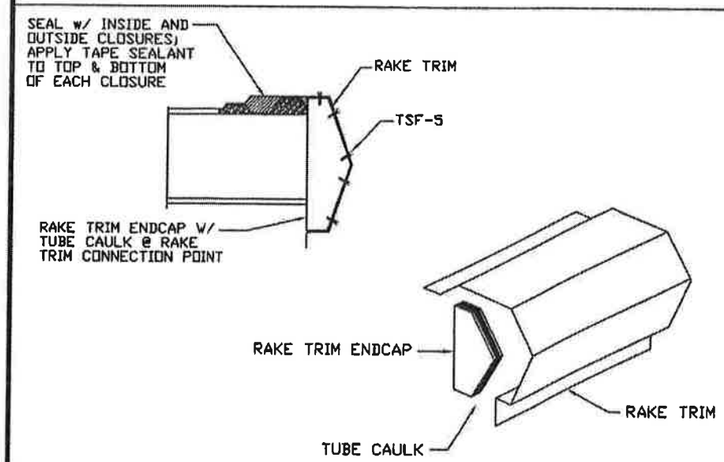


FOR BUILDINGS w/ SIMPLE EAVE TRIM AND NO GUTTER, INSTALL A RAKE ENDCAP* AS SHOWN; ATTACH TO RAKE TRIM w/ (3) TSF-5. TRIM INSIDE AND OUTSIDE CLOSURES TO FILL BETWEEN RAKE TRIM AND ROOF

T/D14 RAKE ENDCAP DETAIL

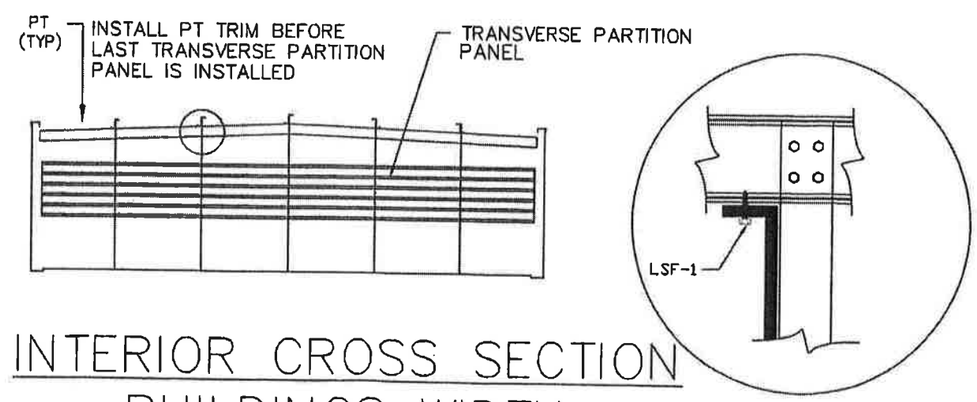


INTERIOR CROSS SECTION
BUILDINGS WIDTH

T/D15 PARTITION TRIM

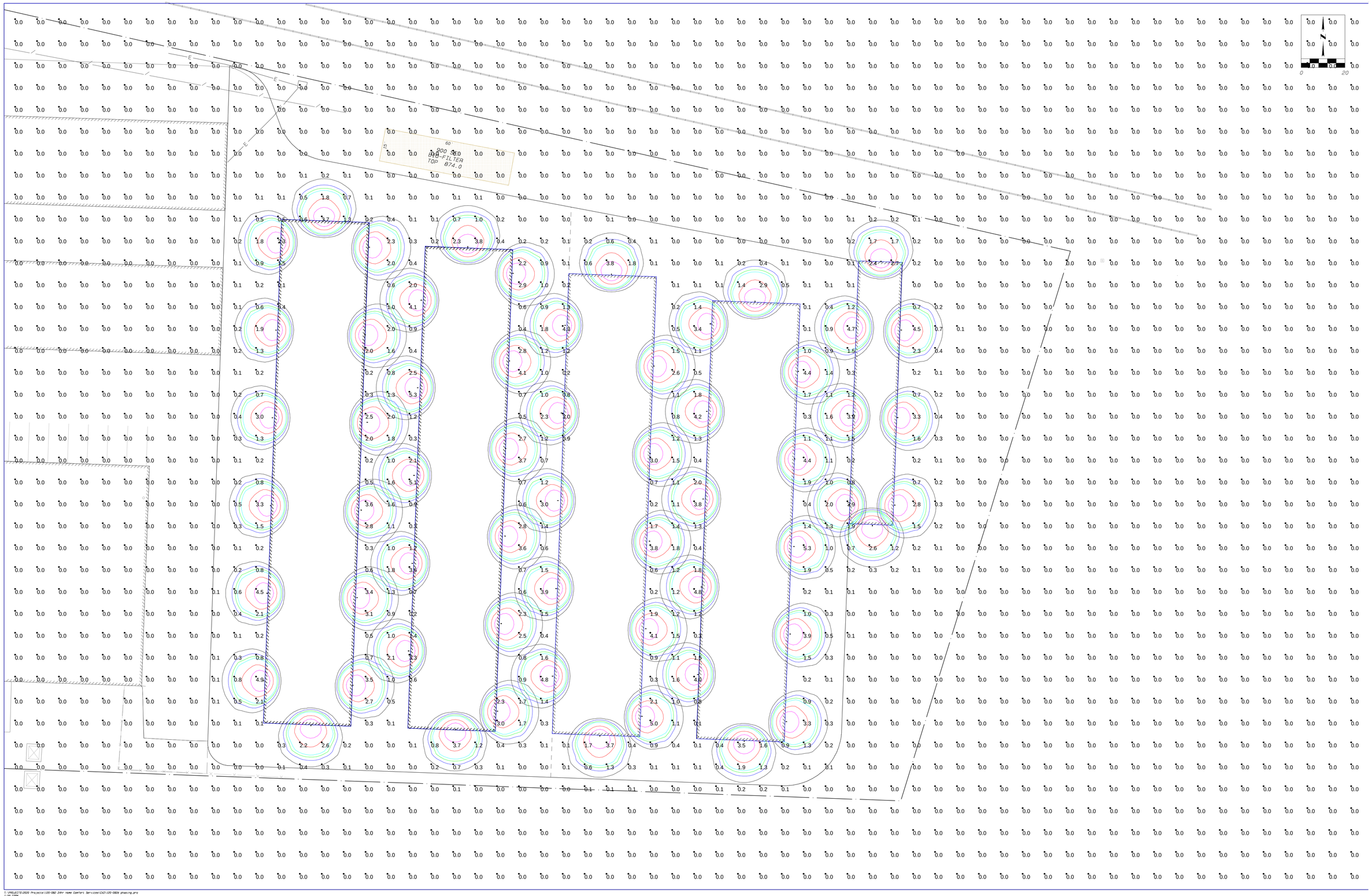


WERNER ELECTRIC SUPPLY
4800 W PROSPECT AVENUE APPLETON, WI 54914
(920) 815-4050, (920) 815-4060 FAX WWW.WERNERELECTRIC.COM

IN PARTNERSHIP WITH:

# PAVLIK BROS STORAGE UNITS

MILTON, WI

RECORDS INFO

DRAWN BY: DLO
Date:5/7/2020
SCALE: 1" = 20'
JOB #: 050720

SHEET DESCRIPTION

SITE LIGHTING CALCULATIONS

SHEET NO.

E01

T:\PROJECTS\2020 Projects\20-080 Jahr Home Comfort Services\CAD\20-080b phasing.pro
3:06:22PM

# Lumark

## DESCRIPTION

The patented Lumark Crosstour™ LED Wall Pack Series of luminaries provides an architectural style with super bright, energy efficient LEDs. The low-profile, rugged die-cast aluminum construction, universal back box, stainless steel hardware along with a sealed and gasketed optical compartment make the Crosstour impervious to contaminants. The Crosstour wall luminaire is ideal for wall/surface, inverted mount for façade/canopy illumination, post/bollard, site lighting, floodlight and low level pathway illumination including stairs. Typical applications include building entrances, multi-use facilities, apartment buildings, institutions, schools, stairways and loading docks test.

| | | |
|---|---|---|
| **Catalog #** | | **Type** |
| **Project** | | |
| **Comments** | | **Date** |
| **Prepared by** | | |

## SPECIFICATION FEATURES

**Construction**
Slim, low-profile LED design with rugged one-piece, die-cast aluminum hinged removable door and back box. Matching housing styles incorporate both a small and medium design. The small housing is available in 12W, 18W and 26W. The medium housing is available in the 38W model. Patented secure lock hinge feature allows for safe and easy tool-less electrical connections with the supplied push-in connectors. Back box includes three half-inch, NPT threaded conduit entry points. The universal back box supports both the small and medium forms and mounts to standard 3-1/2" to 4" round and octagonal, 4" square, single gang and masonry junction boxes. Key hole gasket allows for adaptation to junction box or wall. External fin design extracts heat from the fixture surface. One-piece silicone gasket seals door and back box. Minimum 5" wide pole for site lighting application. Not recommended for car wash applications.

**Optical**
Silicone sealed optical LED chamber incorporates a custom engineered mirrored anodized reflector providing high-efficiency illumination. Optical assembly includes impact-resistant tempered glass and meets IESNA requirements for full cutoff compliance. Available in seven lumen packages; 5000K, 4000K and 3000K CCT.

**Electrical**
LED driver is mounted to the die-cast housing for optimal heat sinking. LED thermal management system incorporates both conduction and natural convection to transfer heat rapidly away from the LED source. 12W, 18W, 26W and 38W series operate in -40°C to 40°C [-40°F to 104°F]. High ambient 50°C models available. Crosstour luminaires maintain greater than 89% of initial light output after 72,000 hours of operation. Three half-inch NPT threaded conduit entry points allow for thru-branch wiring. Back box is an authorized electrical wiring compartment. Integral LED electronic driver incorporates surge protection. 120-277V 50/60Hz or 347V 60Hz models.

**Finish**
Crosstour is protected with a Super durable TGIC carbon bronze or summit white polyester powder coat paint. Super durable TGIC powder coat paint finishes withstand extreme climate conditions while providing optimal color and gloss retention of the installed life.

**Warranty**
Five-year warranty.

# XTOR
## CROSSTOUR LED

**APPLICATIONS:**
**WALL / SURFACE**
**POST / BOLLARD**
**LOW LEVEL**
**FLOODLIGHT**
**INVERTED**
**SITE LIGHTING**

## DIMENSIONS

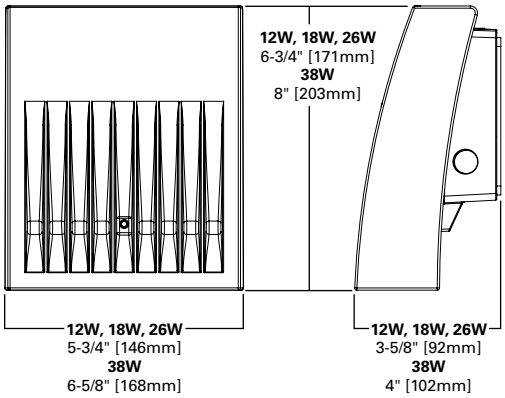


## ESCUTCHEON PLATES

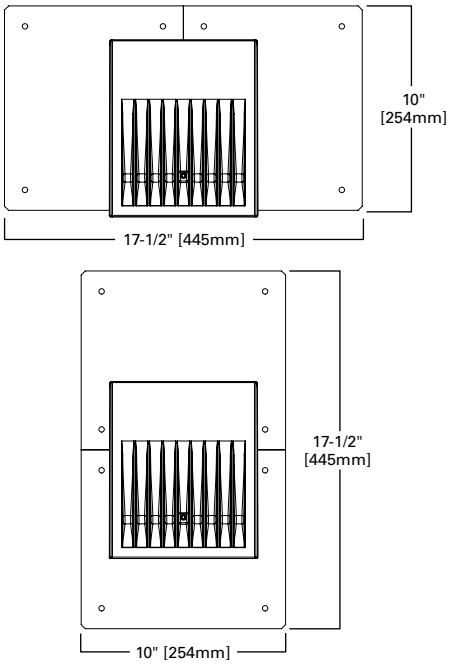


## CERTIFICATION DATA

Dark Sky Approved (Fixed mount, Full cutoff, and 3000K CCT only)
UL/cUL Wet Location Listed
LM79 / LM80 Compliant
ROHS Compliant
ADA Compliant
NOM Compliant Models
IP66 Ingressed Protection Rated
Title 24 Compliant
DesignLights Consortium® Qualified*

## TECHNICAL DATA

40°C Maximum Ambient Temperature
External Supply Wiring 90°C Minimum

## EPA

**Effective Projected Area** (Sq. Ft.):
**XTOR1B, XT0R2B, XT0R3B**=0.34
**XTOR4B**=0.45

## SHIPPING DATA:

**Approximate Net Weight:**
3.7 – 5.25 lbs. [1.7 – 2.4 kgs.]

COOPER Lighting Solutions

*www.designlights.org

## POWER AND LUMENS BY FIXTURE MODEL

| LED Information | XTOR1B | XTOR1B-W | XTOR1B-Y | XTOR2B | XTOR2B-W | XTOR2B-Y | XTOR3B | XTOR3B-W | XTOR3B-Y | XTOR4B | XTOR4B-W | XTOR4B-Y |
|---|---|---|---|---|---|---|---|---|---|---|---|---|
| **Delivered Lumens (Wall Mount)** | 1,418 | 1,396 | 1,327 | 2,135 | 2,103 | 1,997 | 2,751 | 2,710 | 2,575 | 4,269 | 4,205 | 3,995 |
| **Delivered Lumens (With Flood Accessory Kit)** [1] | 1,005 | 990 | 940 | 1,495 | 1,472 | 1,399 | 2,099 | 2,068 | 1,965 | 3,168 | 3,121 | 2,965 |
| **B.U.G. Rating** [2] | B1-U0-G0 | B1-U0-G0 | B1-U0-G0 | B1-U0-G0 | B1-U0-G0 | B1-U0-G0 | B1-U0-G0 | B1-U0-G0 | B1-U0-G0 | B2-U0-G0 | B2-U0-G0 | B2-U0-G0 |
| **CCT (Kelvin)** | 5,000 | 4,000 | 3,000 | 5,000 | 4,000 | 3,000 | 5,000 | 4,000 | 3,000 | 5,000 | 4,000 | 3,000 |
| **CRI (Color Rendering Index)** | 70 | 70 | 70 | 70 | 70 | 70 | 70 | 70 | 70 | 70 | 70 | 70 |
| **Power Consumption (Watts)** | 12W | 12W | 12W | 18W | 18W | 18W | 26W | 26W | 26W | 38W | 38W | 38W |

**NOTES: 1** Includes shield and visor. **2** B.U.G. Rating does not apply to floodlighting.

## LUMEN MAINTENANCE

| Ambient Temperature | TM-21 Lumen Maintenance (72,000 Hours) | Theoretical L70 (Hours) |
|---|---|---|
| **XTOR1B Model** | | |
| 25°C | > 90% | 255,000 |
| 40°C | > 89% | 234,000 |
| 50°C | > 88% | 215,000 |
| **XTOR2B Model** | | |
| 25°C | > 89% | 240,000 |
| 40°C | > 88% | 212,000 |
| 50°C | > 87% | 196,000 |
| **XTOR3B Model** | | |
| 25°C | > 89% | 240,000 |
| 40°C | > 88% | 212,000 |
| 50°C | > 87% | 196,000 |
| **XTOR4B Model** | | |
| 25°C | > 89% | 222,000 |
| 40°C | > 87% | 198,000 |
| 50°C | > 87% | 184,000 |

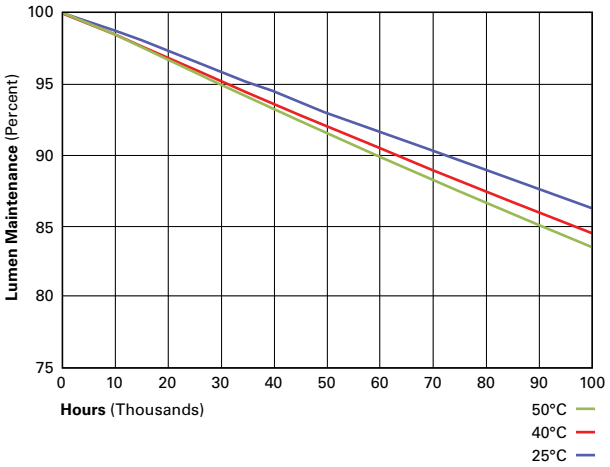


## CURRENT DRAW

| Voltage | Model Series | | | |
|---|---|---|---|---|
| | XTOR1B | XTOR2B | XTOR3B | XTOR4B |
| 120V | 0.103A | 0.15A | 0.22A | 0.34A |
| 208V | 0.060A | 0.09A | 0.13A | 0.17A |
| 240V | 0.053A | 0.08A | 0.11A | 0.17A |
| 277V | 0.048A | 0.07A | 0.10A | 0.15A |
| 347V | 0.039A | 0.06A | 0.082A | 0.12A |

## ORDERING INFORMATION

**Sample Number**: XTOR2B-W-WT-PC1

| **Series** [1] | **LED Kelvin Color** | **Housing Color** | **Options** (Add as Suffix) | **Accessories** (Order Separately) |
|---|---|---|---|---|
| **XTOR1B**=Small Door, 12W<br>**XTOR2B**=Small Door, 18W<br>**XTOR3B**=Small Door, 26W<br>**XTOR4B**=Medium Door, 38W | **[Blank]**=Bright White (Standard), 5000K<br>**W**=Neutral White, 4000K<br>**Y**=Warm White, 3000K | **[Blank]**=Carbon Bronze (Standard)<br>**WT**=Summit White<br>**BK**=Black<br>**BZ**=Bronze<br>**AP**=Grey<br>**GM**=Graphite Metallic<br>**DP**=Dark Platinum | **PC1**=Photocontrol 120V [2]<br>**PC2**=Photocontrol 208-277V [2,3]<br>**347V**=347V [4]<br>**HA**=50°C High Ambient [4] | **WG/XTOR**=Wire Guard [5]<br>**XTORFLD-KNC**=Knuckle Floodlight Kit [6]<br>**XTORFLD-TRN**=Trunnion Floodlight Kit [6]<br>**XTORFLD-KNC-WT**=Knuckle Floodlight Kit, Summit White [6]<br>**XTORFLD-TRN-WT**=Trunnion Floodlight Kit, Summit White [6]<br>**EWP/XTOR**=Escutcheon Wall Plate, Carbon Bronze<br>**EWP/XTOR-WT**=Escutcheon Wall Plate, Summit White |

**NOTES:**
**1.** DesignLights Consortium® Qualified and classified for both DLC Standard and DLC Premium, refer to www.designlights.org for details.
**2.** Photocontrols are factory installed.
**3.** Order PC2 for 347V models.
**4.** Thru-branch wiring not available with HA option or with 347V. XTOR3B not available with HA and 347V or 120V combination.
**5.** Wire guard for wall/surface mount. Not for use with floodlight kit accessory.
**6.** Floodlight kit accessory supplied with knuckle (KNC) or trunnion (TRN) base, small and large top visors and small and large impact shields.

## STOCK ORDERING INFORMATION

| **12W Series** | **18W Series** | **26W Series** | **38W Series** |
|---|---|---|---|
| **XTOR1B**=12W, 5000K, Carbon Bronze | **XTOR2B**=18W, 5000K, Carbon Bronze | **XTOR3B**=26W, 5000K, Carbon Bronze | **XTOR4B**=38W, 5000K, Carbon Bronze |
| **XTOR1B-WT**=12W, 5000K, Summit White | **XTOR2B-W**=18W, 4000K, Carbon Bronze | **XTOR3B-W**=26W, 4000K, Carbon Bronze | **XTOR4B-W**=38W, 4000K, Carbon Bronze |
| **XTOR1B-PC1**=12W, 5000K, 120V PC, Carbon Bronze | **XTOR2B-WT**=18W, 5000K, Summit White | **XTOR3B-WT**=26W, 5000K, Summit White | **XTOR4B-WT**=38W, 5000K, Summit White |
| **XTOR1B-W**=12W, 4000K, Carbon Bronze | **XTOR2B-PC1**=18W, 5000K, 120V PC, Carbon Bronze | **XTOR3B-PC1**=26W, 5000K, 120V PC, Carbon Bronze | **XTOR4B-PC1**=38W, 5000K, 120V PC, Carbon Bronze |
| | **XTOR2B-W-PC1**=18W, 4000K, 120V PC, Carbon Bronze | **XTOR3B-W-PC1**=26W, 4000K, 120V PC, Carbon Bronze | **XTOR4B-W-PC1**=38W, 4000K, 120V PC, Carbon Bronze |
| | **XTOR2B-347V**=18W, 5000K, Carbon Bronze, 347V | **XTOR3B-347V**=26W, 5000K, Carbon Bronze, 347V | **XTOR4B-347V**=38W, 5000K, Carbon Bronze, 347V |
| | **XTOR2B-WT-PC1**=18W, 5000K, 120V PC, Summit White | **XTOR3B-PC2**=26W, 5000K, 208-277V PC, Carbon Bronze | |



**Cooper Lighting Solutions**
1121 Highway 74 South
Peachtree City, GA 30269
P: 770-486-4800
www.cooperlighting.com

Specifications and dimensions subject to change without notice.

# 310 Sunnyside Site Diagrams

To Obtain Location of Participants Underground Facilities Before You Dig in Wisconsin

Member One Call System International

CALL DIGGERS HOTLINE
1-800-242-8511

Wis Statute 182.0175 (1974) Requires Min. 3 Work Days Notice Before You Excavate

SITE NOTES:
-LIGHTING ANTICIPATED TO BE WALL PACK UNITS
-SECURITY CAMERA POLE LOCATIONS UNKNOWN AT THIS TIME, AND SHALL BE SHOWN PRIOR TO FULL SITE PLAN REVIEW.

SITE DATA:

| | | |
|---|---|---|
| LOT SIZE: | 186,630 sf | (4.28 Ac) |
| EXISTING IMPERVIOUS SURFACE: | 64,631 sf | |
| PHASE 1 IMPERVIOUS SURFACE: | 36,678 sf | |
| FUTURE IMPERVIOUS SURFACE: | 35,299 sf | |
| TOTAL BUILD-OUT IMPERVIOUS SURFACE: | 136,608 sf | |
| REMAINING GREENSPACE: | 50,022 sf | (26.8%) |

N

0 30 60 90

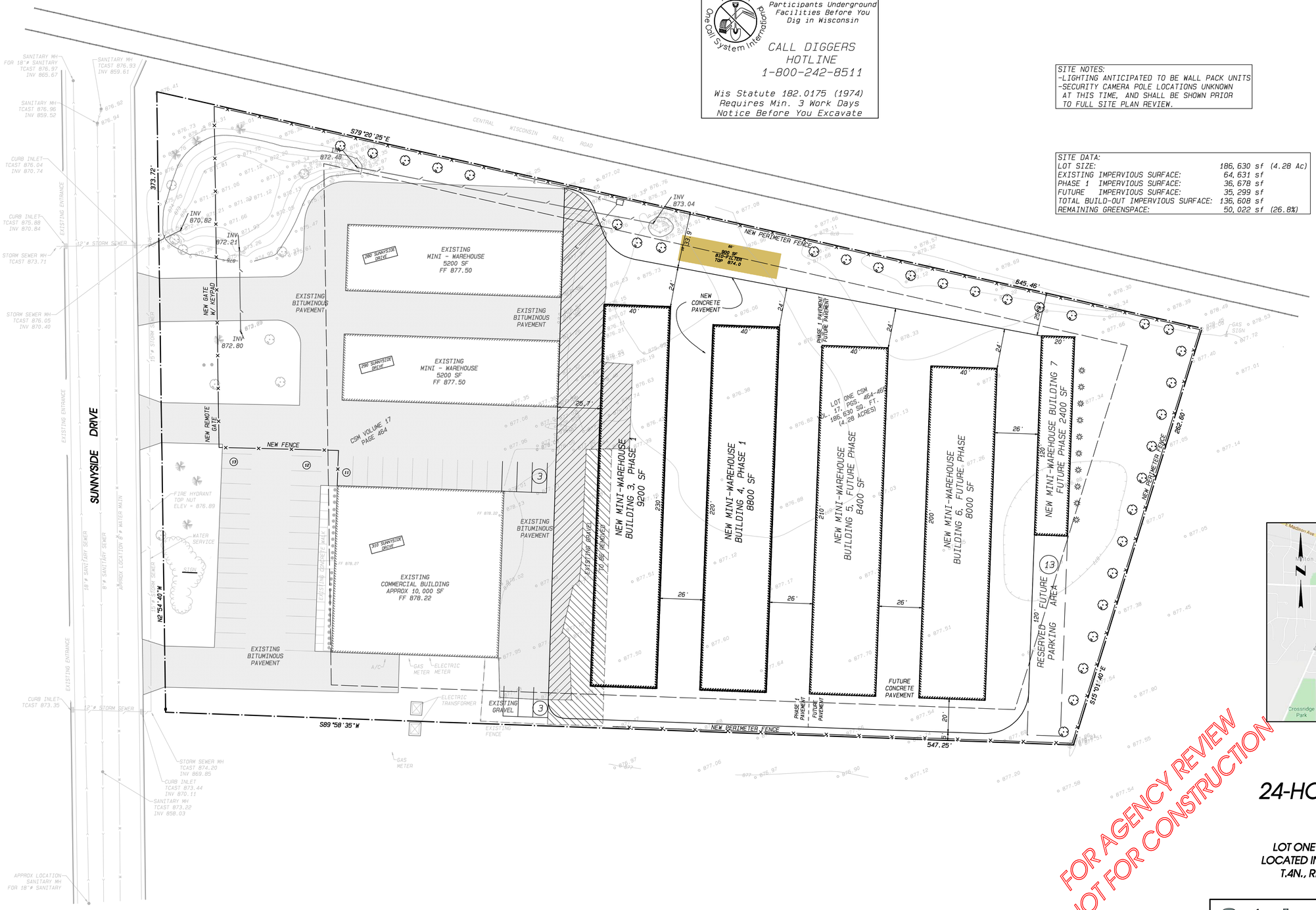


## LEGEND:

- EASEMENT LINE
- BUILDING SETBACK LINE
- SANITARY SEWER
- WATER MAIN
- STORM SEWER
- PROPERTY LINE
- FENCE LINE
- CONSTRUCTION LIMITS
- PROPOSED SILT FENCE
- 785 CONTOUR LINE
- CENTER LINE
- BUILDING LINE
- AERIAL UTILITY WIRE(S)
- T TELEPHONE LINE
- G GAS LINE
- E ELECTRIC LINE
- VE VISION EASEMENT
- DE DRAINAGE EASEMENT
- UE UTILITY EASEMENT
- FF FINISHED FLOOR ELEVATION

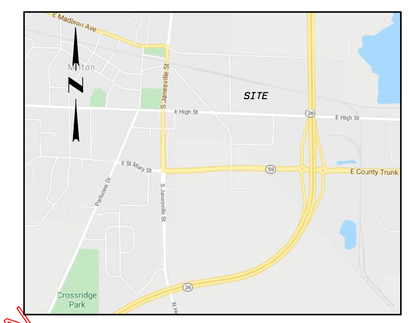


LOCATION SKETCH

FOR AGENCY REVIEW
NOT FOR CONSTRUCTION

# CONSTRUCTION PLANS FOR 24-HOUR HOME COMFORT SERVICE

LOT ONE OF CSM VOLUME 17, PAGES 464 & 465, LOCATED IN THE SE 1/4 OF THE SW 1/4 OF SECTION 26, T.4N., R.13E. OF THE 4TH P.M., CITY OF MILTON, ROCK COUNTY, WISCONSIN.


Combs & Associates
109 W. Milwaukee St.
Janesville, WI 53548
www.combssurvey.com
• LAND SURVEYING
• LAND PLANNING
• CIVIL ENGINEERING
tel: 608 752-0575
fax: 608 752-0534


| | |
|---|---|
| DATE | 05/07/20 |
| BY | JPJ |
| APPROVED | AFG |
| PROJECT NO. | 120-082 |

REVISIONS
05/27/20 CITY REVIEW JPJ

## GENERAL NOTES

All pavement construction shall be in conformance with the typical cross section shown on the plans and in conformance with the State of Wisconsin Department of Transportation "Standard Specifications for Road and Bridge Construction", unless otherwise indicated on the plans, or as indicated.

Contractor shall provide traffic barricades in order to limit access to site during off-construction periods.

Topsoil shall be stripped from the structural areas prior to any excavation and grading, and shall be stockpiled as directed by the owner.

The contractor shall clear, grub, and dispose of all brush, stumps, trees, etc., within the construction limits of the site. Contractor shall remove those materials from the work site and dispose of them at the contractor's option and in conformance with State and local regulations.

The sub-grade shall be thoroughly compacted prior to the placement of the aggregate base course. Crown shall conform to pavement crown.

Curb contractor shall depress curb at all future sidewalk ramp locations. Ramps shall be installed as Type 2 at all curb radii.

~~Asphalting of streets is to be completed over a one-year period with only the binder course being placed immediately.~~

Contractor shall verify location of all existing utilities prior to excavation. Call Digger's Hotline before digging (1 800 242-8511).

Rip Rap shall conform to Wisconsin Department of Transportation "Standard Specifications for Road and Bridge Construction", Section 606. Depth of Rip Rap shall be 1.0 foot (minimum). Contractor shall place Filter Fabric under the Rip Rap.

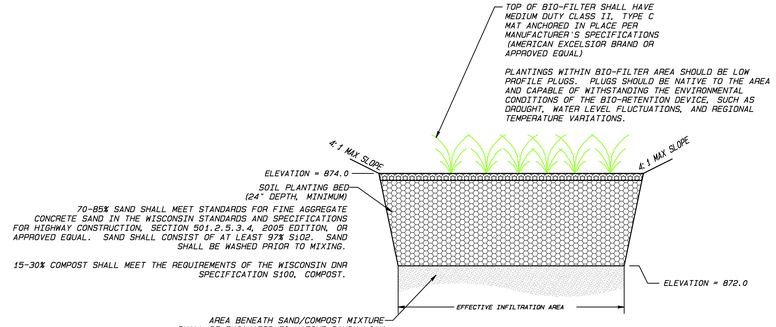


### BIO-FILTER DETAIL

NOTE: SEE DNR TECHNICAL STANDARD 1004 FOR FURTHER DETAIL (http://dnr.wi.gov/topic/stormwater/documents/Bioretention1004.pdf)

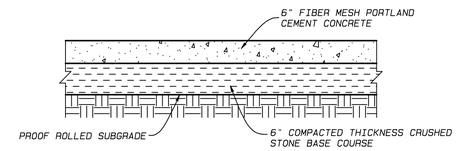


### CONCRETE PAVEMENT

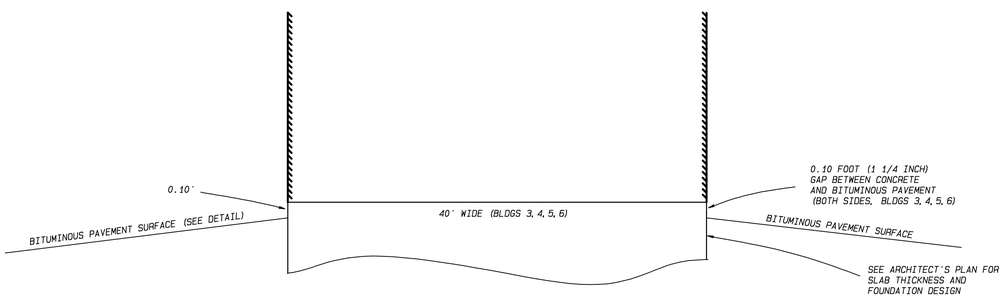


### BUILDING PAD AND PAVING DIAGRAM

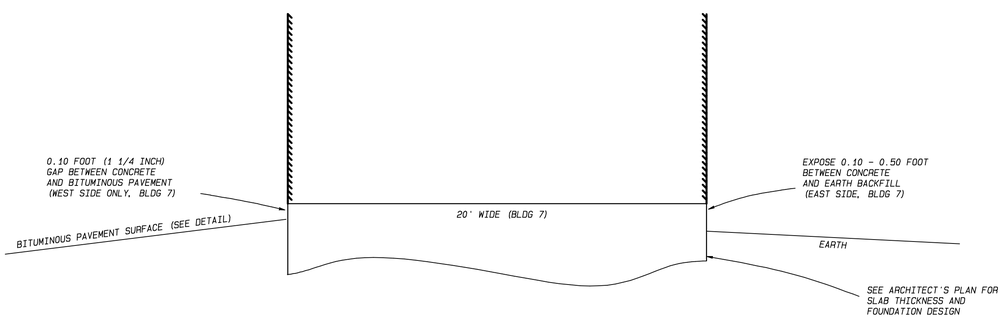


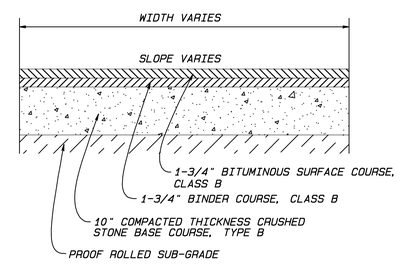


### OPTIONAL BITUMINOUS PAVEMENT


Combs & ASSOCIATES
109 W. Milwaukee St.
Janesville, WI 53548
www.combssurvey.com
• LAND SURVEYING
• LAND PLANNING
• CIVIL ENGINEERING
tel: 608 752-0575
fax: 608 752-0534


| | |
|---|---|
| DATE | 05/07/20 |
| BY | JPJ |
| APPROVED | AFG |
| PROJECT NO. | 120-082 |

REVISIONS
05/27/20 CITY REVIEW JPJ




I:\PROJECTS\2020 Projects\120-082 24hr Home Comfort Services\CAD\120-082e.pro
1:26 PM

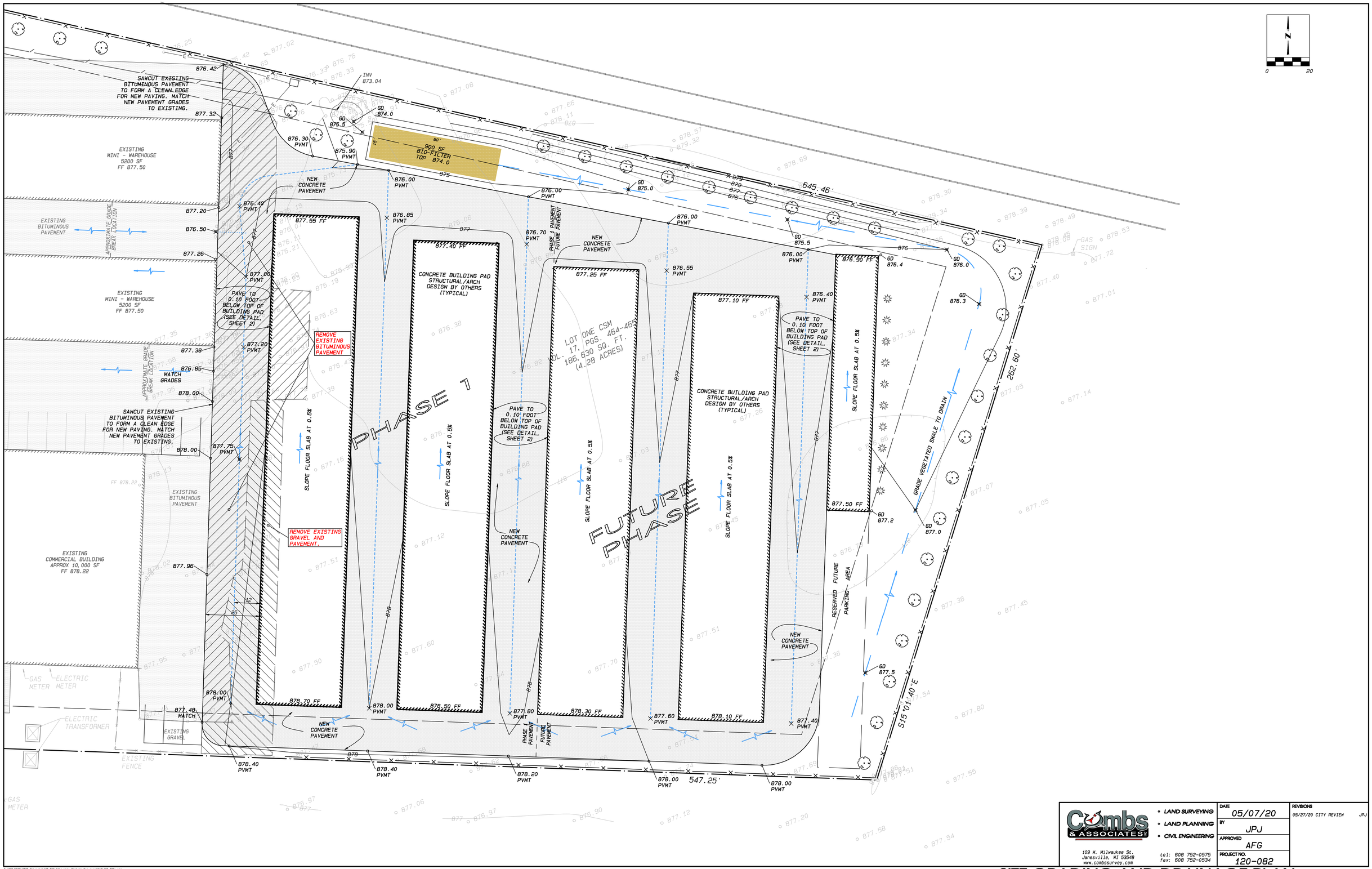


Combs & ASSOCIATES

- LAND SURVEYING
- LAND PLANNING
- CIVIL ENGINEERING

109 W. Milwaukee St.
Janesville, WI 53548
www.combssurvey.com

tel: 608 752-0575
fax: 608 752-0534

| | |
|---|---|
| DATE | 05/07/20 |
| BY | JPJ |
| APPROVED | AFG |
| PROJECT NO. | 120-082 |

REVISIONS

05/27/20 CITY REVIEW JPJ

# SITE GRADING AND DRAINAGE PLAN

SHEET 3 OF 5

O:\PROJECTS\2020 Projects\120-082 JVWr Home Comfort Services\CAD\120-082W.pro
1:28:17PM

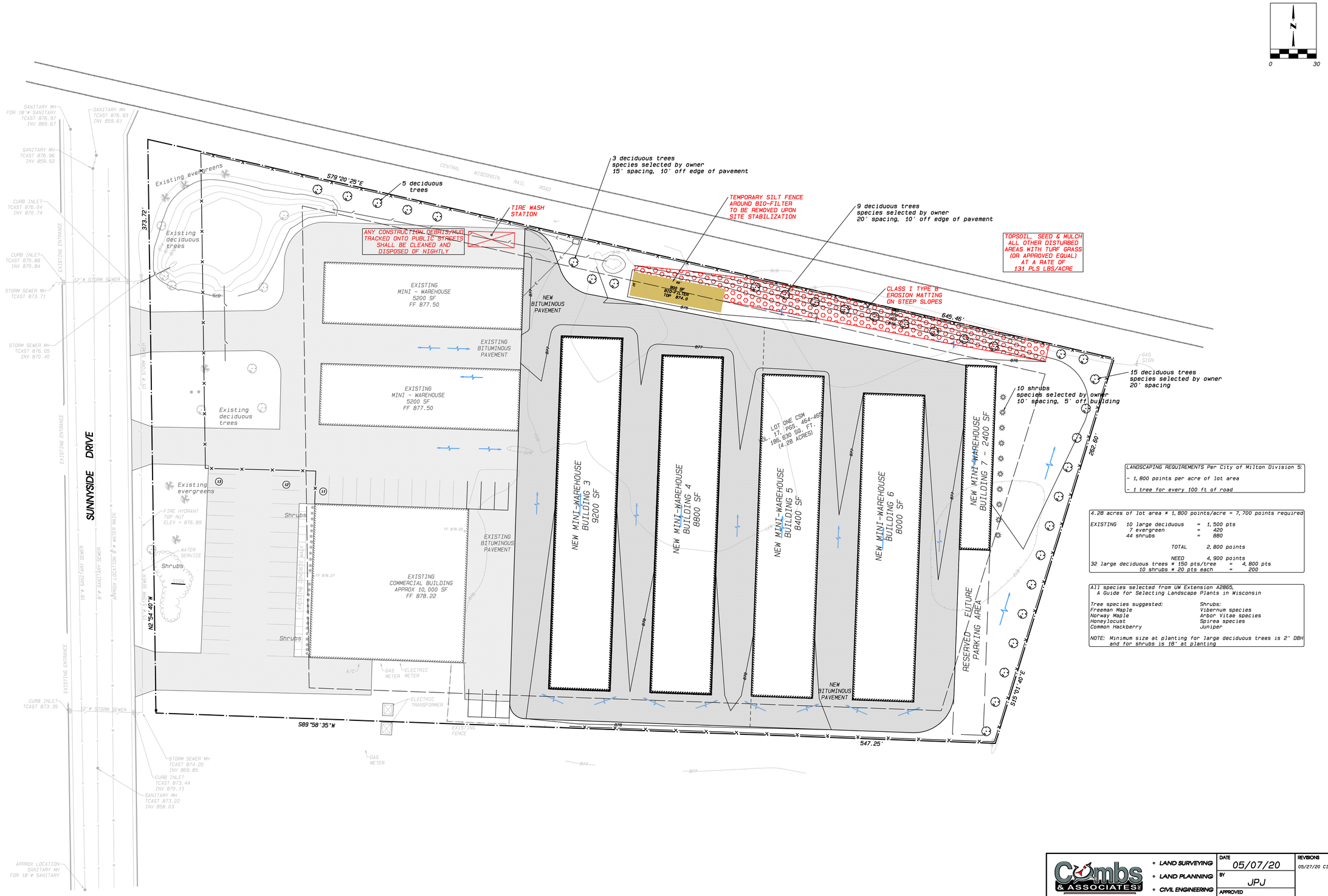


LANDSCAPING REQUIREMENTS Per City of Milton Division 5:

- 1,800 points per acre of lot area
- 1 tree for every 100 ft of road

4.28 acres of lot area * 1,800 points/acre = 7,700 points required

| | | | |
|---|---|---|---|
| EXISTING | 10 large deciduous | = | 1,500 pts |
| | 7 evergreen | = | 420 |
| | 44 shrubs | = | 880 |
| | TOTAL | | 2,800 points |
| | NEED | | 4,900 points |
| 32 large deciduous trees * 150 pts/tree | | = | 4,800 pts |
| 10 shrubs * 20 pts each | | = | 200 |

All species selected from UW Extension A2865,
A Guide for Selecting Landscape Plants in Wisconsin

| Tree species suggested: | Shrubs: |
|---|---|
| Freeman Maple | Viburnum species |
| Norway Maple | Arbor Vitae species |
| Honeylocust | Spirea species |
| Common Hackberry | Juniper |

NOTE: Minimum size at planting for large deciduous trees is 2" DBH and for shrubs is 18" at planting


Combs & ASSOCIATES LLC
109 W. Milwaukee St.
Janesville, WI 53548
www.combssurvey.com
tel: 608 752-0575
fax: 608 752-0534


- LAND SURVEYING
- LAND PLANNING
- CIVIL ENGINEERING

| DATE | 05/07/20 |
|---|---|
| BY | JPJ |
| APPROVED | AFG |
| PROJECT NO. | 120-082 |

REVISIONS
05/27/20 CITY REVIEW JPJ

# SITE EROSION CONTROL AND LANDSCAPE PLAN



I:\PROJECTS\2020 Projects\120-082 24hr Home Comfort Services\CAD\120-082e.pro
5:28 2PM

## GENERAL EROSION NOTES

A. THE STORM WATER POLLUTION PREVENTION PLAN (SWPPP) IS COMPRISED OF THIS DRAWING, THE EROSION CONTROL DETAILS, THE NOI PERMIT, SUBSEQUENT REPORTS AND RELATED DOCUMENTS.

B. ALL CONTRACTORS AND SUBCONTRACTORS INVOLVED WITH STORM WATER POLLUTION PREVENTION SHALL OBTAIN A COPY OF THE SWPPP AND THE STATE OF WISCONSIN NATIONAL POLLUTANT DISCHARGE ELIMINATION SYSTEM GENERAL PERMIT (NPDES PERMIT) AND BECOME FAMILIAR WITH THEIR CONTENTS.

C. CONTRACTOR SHALL IMPLEMENT BEST MANAGEMENT PRACTICES (BMP's) AS REQUIRED BY THE SWPPP. ADDITIONAL BMP's SHALL BE IMPLEMENTED AS DICTATED BY CONDITIONS AT NO ADDITIONAL COST OF THE OWNER THROUGHOUT ALL PHASES OF CONSTRUCTION.

D. BEST MANAGEMENT PRACTICES AND CONTROLS SHALL CONFORM TO FEDERAL, STATE, OR LOCAL REQUIREMENTS, OR MANUAL OF PRACTICE, AS APPLICABLE. CONTRACTOR SHALL IMPLEMENT ADDITIONAL CONTROLS AS DIRECTED BY PERMITTING AGENCY OR OWNER.

E. THE SITE MAP MUST CLEARLY DELINEATE ALL STATE WATERS AND PERMITS FOR ANY CONSTRUCTION ACTIVITY IMPACTING STATE WATERS OR REGULATED WETLANDS, AND MUST BE MAINTAINED ON-SITE AT ALL TIMES.

F. CONTRACTOR SHALL MINIMIZE CLEARING TO THE MAXIMUM EXTENT PRACTICABLE OR AS REQUIRED BY THE GENERAL PERMIT.

G. GENERAL CONTRACTOR SHALL DENOTE ON PLAN THE TEMPORARY PARKING AND STORAGE AREA WHICH SHALL ALSO BE USED AS THE EQUIPMENT MAINTENANCE AND CLEANING AREA, EMPLOYEE PARKING AREA, AND AREA FOR LOCATING PORTABLE FACILITIES, OFFICE TRAILERS, AND TOILET FACILITIES.

H. ALL WASH WATER (CONCRETE TRUCKS, VEHICLE CLEANING, EQUIPMENT CLEANING, ETC.) SHALL BE DETAINED AND PROPERLY TREATED OR DISPOSED.

I. SUFFICIENT OIL AND GREASE ABSORBING MATERIALS AND FLOATATION BOOMS SHALL BE MAINTAINED ON-SITE OR READILY AVAILABLE TO CONTAIN AND CLEAN UP FUEL OR CHEMICAL SPILLS AND LEAKS.

J. DUST ON THE SITE SHALL BE CONTROLLED. THE USE OF MOTOR OILS AND OTHER PETROLEUM BASED OR TOXIC LIQUIDS FOR DUST SUPPRESSION OPERATIONS IS PROHIBITED.

K. RUBBISH, TRASH, GARBAGE, LITTER, OR OTHER SUCH MATERIALS SHALL BE DEPOSITED INTO SEALED CONTAINERS. MATERIALS SHALL BE PREVENTED FROM LEAVING THE PREMISES THROUGH THE ACTION OF WIND OR STORM WATER DISCHARGE INTO DRAINAGE DITCHES OR WATERS OF THE STATE.

L. ALL STORM WATER POLLUTION PREVENTION MEASURES PRESENTED ON THIS PLAN, AND IN THE SWPPP SHALL BE INITIATED AS SOON AS PRACTICABLE.

M. DISTURBED PORTIONS OF THE SITE WHERE CONSTRUCTION ACTIVITY HAS STOPPED FOR AT LEAST 14 DAYS SHALL BE TEMPORARILY SEEDED. THESE AREAS SHALL BE SEEDED NO LATER THAN 14 DAYS FROM THE LAST CONSTRUCTION ACTIVITY OCCURRING IN THESE AREAS.

N. DISTURBED PORTIONS OF THE SITE WHERE CONSTRUCTION ACTIVITY HAS PERMANENTLY STOPPED SHALL BE PERMANENTLY SEEDED. THESE AREAS SHALL BE SEEDED NO LATER THAN 14 DAYS AFTER THE LAST CONSTRUCTION ACTIVITY OCCURRING IN THESE AREAS. REFER TO THE GRADING PLAN AND/OR LANDSCAPING PLAN.

O. IF THE ACTION OF VEHICLES TRAVELING OVER THE GRAVEL CONSTRUCTION ENTRANCES IS NOT SUFFICIENT TO REMOVE THE MAJORITY OF DIRT OR MUD, THEN THE TIRES MUST BE WASHED BEFORE THE VEHICLES ENTER A PUBLIC ROAD. IF WASHING IS USED, PROVISIONS MUST BE MADE TO INTERCEPT THE WASH WATER AND TRAP THE SEDIMENT BEFORE IT IS CARRIED OFF THE SITE.

P. ALL MATERIALS SPILLED, DROPPED, WASHED, OR TRACKED FROM VEHICLES ONTO ROADWAYS OR INTO STORM DRAINS MUST BE REMOVED IMMEDIATELY.

Q. CONTRACTORS OR SUBCONTRACTORS SHALL BE RESPONSIBLE FOR REMOVING SEDIMENT IN THE DETENTION PONDS AND ANY SEDIMENT THAT MAY HAVE COLLECTED IN THE STORM SEWER DRAINAGE SYSTEMS IN CONJUNCTION WITH THE STABILIZATION OF THE SITE.

R. ON-SITE & OFF-SITE SOIL STOCKPILE AND BORROW AREAS SHALL BE PROTECTED FROM EROSION AND SEDIMENTATION THROUGH IMPLEMENTATION OF BEST MANAGEMENT PRACTICES. STOCKPILE AND BORROW AREA LOCATIONS SHALL BE NOTED ON THE SITE MAP AND PERMITTED IN ACCORDANCE WITH GENERAL PERMIT REQUIREMENTS.

S. SLOPES SHALL BE LEFT IN A ROUGHENED CONDITION DURING THE GRADING PHASE TO REDUCE RUNOFF VELOCITIES AND EROSION.

T. DUE TO THE GRADE CHANGES DURING THE DEVELOPMENT OF THE PROJECT, THE CONTRACTOR SHALL BE RESPONSIBLE FOR ADJUSTING THE EROSION CONTROL MEASURES (SILT FENCES, STRAW BALES, ETC.) TO PREVENT EROSION.

U. ALL CONSTRUCTION SHALL BE STABILIZED AT THE END OF EACH WORKING DAY. THIS INCLUDES BACKFILLING OF TRENCHES FOR UTILITY CONSTRUCTION AND PLACEMENT OF GRAVEL OR BITUMINOUS PAVING FOR ROAD CONSTRUCTION.

## EROSION CONTROL PLAN NOTES:

1. PHASED CONSTRUCTION / STABILIZATION

TO ENSURE THAT DISTURBED AREAS ARE NOT VULNERABLE TO EROSION FOR EXTENDED PERIODS, THE SITE NEEDS TO BE BROKEN INTO ZONES OF LAND DISTURBANCE.

WITHIN EACH ZONE, STABILIZE (E.G., SEED & MULCH, COMPOST, EROSION MAT, POLYMER) ALL DISTURBED AREAS OUTSIDE OF STREET RIGHT-OF-WAY BEFORE BREAKING GROUND IN THE NEXT ZONE. STABILIZATION SHALL OCCUR WITHIN 30 DAYS OF INITIAL GROUNDBREAKING OR WITHIN 7 DAYS OF ACHIEVING FINAL GRADE, WHICH EVER OCCURS FIRST.

MULCH AS PART OF A STABILIZATION MEASURE SHALL BE APPLIED TO PRODUCE A CONTINUOUS COVER OF MULCH AND SHALL BE ANCHORED AT A RATE OF 2 TONS PER ACRE. IN ALL CASES, THE MULCH MUST BE ANCHORED INTO THE SOIL BY DISCING.

2. CONSTRUCTION ENTRANCES/EXITS

CONTRACTOR SHALL PROVIDE A STONE TRACKING PAD AT THE POINT(S) OF ACCESS AS SHOWN ON THE PLANS. INSTALL ACCORDING TO WDNR STANDARD 1057. REFER TO WDNR'S WEB PAGE OF TECHNICAL STANDARDS AT:
http://dnr.wi.gov/org/water/wm/nps/stormwater/techstds.htm#Construction

3. WATER PROVISION

FOR THE FIRST SIX WEEKS AFTER INITIAL STABILIZATION (E.G., SEED & MULCH, EROSION MAT, SOD) OF A DISTURBED AREA, PROVISION SHALL BE MADE FOR WATERING WHENEVER MORE THAN 7 DAYS OF DRY WEATHER ELAPSE.

4. TEMPORARY STABILIZATION USING ANIONIC POLYMER

ANIONIC POLYACRYLAMIDE WILL BE APPLIED TO ALL DISTURBED AREAS WHERE THE VILLAGE ENGINEER OR WDNR REPRESENTATIVES DEEM STABILIZATION AND/OR EROSION TO BE PROBLEMATIC. APPLICATION OF POLYACRYLAMIDE WILL BE ACCORDING TO WDNR CONSERVATION PRACTICE STANDARD 1050, EROSION CONTROL LAND APPLICATION OF ANIONIC POLYACRYLAMIDE. REFER TO WDNR'S STORMWATER WEB PAGE OF TECHICAL STANDARDS AT:
http://dnr.wi.gov/org/water/wm/nps/stormwater/techstds.htm

~~5. DEEP TILLING~~

~~FOLLOWING HEAVY GRADING, DEEP TILLING (A.K.A. SUBSOILING) WILL BE PERFORMED ON ALL GRADED AREAS OUTSIDE THE FOOTPRINT OF STREET FOOTPRINTS. THE OPERATION SHALL BE ACCOMPLISHED USING THIN STRAIGHT STEEL SHANKS PULLED BY TRACKED MACHINERY. EACH SHANK SHALL BE 24 TO 36 INCHES LONG, POSITIONED OVER THE TRACTOR TRACKS, AND SPACED 4 TO 5 FEET APART. DEEP TILLING SHALL BE DONE ON DRY SOIL AND ACROSS THE SLOPE. REFER TO THE DANE COUNTY EROSION CONTROL AND STORMWATER MANAGEMENT MANUAL, APPENDIX I.D.1, WHICH IS ACCESSIBLE FROM THE DANE COUNTY LAKES AND WATERSHED COMMISSION WEB SITE AT:
http://www.countyofdane.com/lwrd/lakes/stormwatermanual.shtml~~

6. SOIL STOCKPILES

A ROW OF SILT FENCE PLACED DOWNSLOPE AND AT LEAST 10 FEET AWAY FROM SOIL STOCKPILES SHALL PROTECT ALL STOCKPILES. SOIL STOCKPILES THAT ARE INACTIVE FOR MORE THAN 14 CONSECUTIVE DAYS SHALL BE STABILIZED WITH SEED & MULCH, EROSION MAT, POLYMER, OR COVERED WITH TARPS OR SIMILAR MATERIAL.

7. DEWATERING

WATER PUMPED FROM THE SITE SHALL BE TREATED BY USING A TEMPORARY SEDIMENTATION BASIN, PORTABLE DEWATERING BASIN OR AN EQUIVALENT DEVICE.

ANY INDIVIDUAL SEDIMENTATION BASIN SHALL HAVE A DEPTH OF AT LEAST 3 FEET AND PROVIDE A MAXIMUM SURFACE SETTLING RATE OF 1500 GALLONS PER SQUARE FOOT PER DAY.

THIS WATER SHALL BE DISCHARGED IN A MANNER THAT DOES NOT INDUCE EROSION OF THE SITE OR ADJACENT PROPERTY.

8. STORM SEWER INLETS

PROVIDE WDOT TYPE D "CATCHALL" INLET PROTECTION OR EQUIVALENT. REFER TO WDOT PRODUCT ACCEPTABILITY LIST AT: http://www.dot.wisconsin.gov/business/engrserv/pal.htm. INLET PROTECTION SHALL BE INSTALLED PRIOR TO THE STORM SEWER SYSTEM RECEIVING SITE RUNOFF. OTHER THAN FOR PERFORMING MAINTENANCE, THESE DEVICES SHALL NOT BE REMOVED UNTIL FLAT-LEVEL STABILIZATION IS COMPLETE.

9. INSPECTIONS

ALL EROSION CONTROL MEASURES AND STRUCTURES SERVING THE SITE MUST BE INSPECTED AT LEAST WEEKLY AND WHENEVER 0.5 INCHES OF RAIN OR MORE IS PRODUCED WITHIN 24 HOURS. ALL NECESSARY MAINTENANCE SHOULD FOLLOW THE INSPECTIONS WITHIN 24 HOURS.

10. BIO-FILTER AREA

THE BIO-FILTER AREA SHALL BE EXCAVATED TO ALLOW SEDIMENTATION WITHIN IT DURING CONSTRUCTION. AND ACCUMULATED SEDIMENT SHALL BE REMOVED AT THE COMPLETION OF CONSTRUCTION, JUST PRIOR TO PLACING ENGINEERED MIX.

## MAINTENANCE

ALL MEASURES STATED ON THIS EROSION AND SEDIMENT CONTROL PLAN, AND IN SWPPP SHALL BE MAINTAINED IN FULLY FUNCTIONAL CONDITION UNTIL NO LONGER REQUIRED FOR A COMPLETED PHASE OF WORK OR FINAL STABILIZATION OF THE SITE. ALL EROSION AND SEDIMENTATION CONTROL MEASURES SHALL BE CHECKED BY A QUALIFIED PERSON IN ACCORDANCE WITH THE CONTRACT DOCUMENTS OR THE APPLICABLE PERMIT, WHICHEVER IS MORE STRINGENT, AND REPAIRED IN ACCORDANCE WITH THE FOLLOWING:

1. INLET PROTECTION DEVICES AND BARRIERS SHALL BE REPAIRED OR REPLACED IF THEY SHOW SIGNS OF UNDERMINING, OR DETERIORATION.
2. ALL SEEDED AREAS SHALL BE CHECKED REGULARLY TO SEE THAT A GOOD STAND IS MAINTAINED. AREAS SHOULD BE FERTILIZED, WATERED, AND RESEEDED AS NEEDED.
3. SILT FENCES SHALL BE REPAIRED TO THEIR ORIGINAL CONDITIONS IF DAMAGED. SEDIMENT SHALL BE REMOVED FROM THE SILT FENCES WHEN IT REACHES ONE-HALF THE HEIGHT OF THE SILT FENCE.
4. THE CONSTRUCTION ENTRANCES SHALL BE MAINTAINED IN A CONDITION WHICH SHALL PREVENT TRACKING OR FLOW OF MUD ONTO PUBLIC RIGHTS-OF-WAY. THIS MAY REQUIRE PERIODIC TOP DRESSING OF THE CONSTRUCTION ENTRANCES AS CONDITIONS DEMAND.
5. THE TEMPORARY PARKING AND STORAGE AREA SHALL BE KEPT IN GOOD CONDITION (SUITABLE FOR PARKING AND STORAGE). THIS MAY REQUIRE PERIODIC TOP DRESSING OF THE TEMPORARY PARKING AS CONDITIONS DEMAND.
6. OUTLET STRUCTURES IN THE SEDIMENTATION BASINS SHALL BE MAINTAINED IN OPERATIONAL CONDITIONS AT ALL TIMES. SEDIMENT SHALL BE REMOVED FROM SEDIMENT BASINS OR TRAPS WHEN THE DESIGN CAPACITY HAS BEEN REDUCED.

## CONSTRUCTION SEQUENCE:

PHASE 1

1. Install construction entrances/exits.
2. Prepare temporary parking and equipment storage area.
3. Install silt fencing where indicated.
4. Construct the temporary sedimentation basin (infiltration areas & bio-filter) and other diversions.

HALT ALL ACTIVITIES AND CONTACT THE CIVIL ENGINEERING CONSULTANT TO PERFORM AN INSPECTION OF BEST MANAGEMENT PRACTICES (BMP's). GENERAL CONTRACTOR SHALL SCHEDULE AND CONDUCT A STORM WATER PRE-CONSTRUCTION MEETING WITH ENGINEER AND ALL GROUND DISTURBING CONTRACTORS BEFORE PROCEEDING WITH CONSTRUCTION.

5. Clear and grub the site.
6. Begin grading the site.

PHASE 2

1. Temporarily seed denuded areas.
2. Install utilities, ~~wetland/basins, storm sewers, curbs and gutters.~~
3. Install rip-rap around storm structures where indicated.
4. Install inlet protection around all storm sewer structures.
5. Stabilize all areas that are to be seeded and able to be brought to finished grade with seeding or sod.
6. Stabilize all areas that are to be paved and that are able to be brought to subgrade elevation with compacted base material.
7. Grade all possible areas while maintaining diversions and basins.
8. Stabilize all areas that are to be seeded and able to be brought to finished grade with seeding or sod.
9. Stabilize all areas that are to be paved and that are able to be brought to subgrade elevation with compacted base material.
10. Maintain 70% stabilization within disturbed areas.

PHASE 3

1. Backfill and stabilize diversions and basin.
2. Pave site.
3. Complete grading.
4. Remove all temporary erosion and sediment control devices (only if site is stablized).

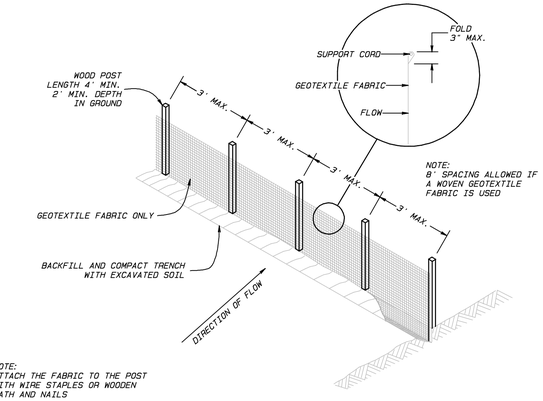


NOTE:
ATTACH THE FABRIC TO THE POST WITH WIRE STAPLES OR WOODEN LATH AND NAILS

## SILT FENCE

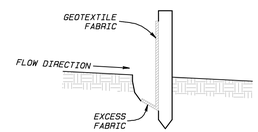


## TRENCH DETAIL

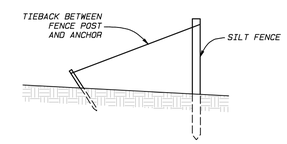


## SILT FENCE TIE BACK

WHEN REQUIRED BY ENGINEER

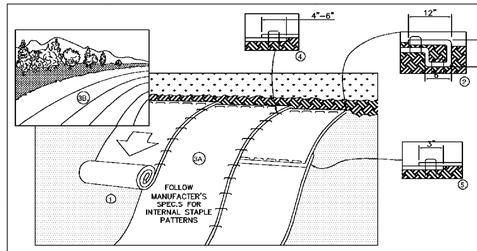


1. PREPARE SOIL BEFORE INSTALLING BLANKETS, INCLUDING ANY NECESSARY APPLICATION OF LIME, FERTILIZER, AND SEED.
2. BEGIN AT THE TOP OF THE SLOPE BY ANCHORING THE BLANKET IN A 6" DEEP X 6" WIDE TRENCH WITH APPROXIMATELY 12" OF BLANKET EXTENDED BEYOND THE UP-SLOPE PORTION OF THE TRENCH. ANCHOR THE BLANKET WITH A ROW OF STAPLES/STAKES APPROXIMATELY 12" APART IN THE BOTTOM OF THE TRENCH. BACKFILL AND COMPACT THE TRENCH AFTER STAPLING. APPLY SEED TO COMPACTED SOIL AND FOLD REMAINING 12" PORTION OF BLANKET BACK OVER SEED AND COMPACTED SOIL. SECURE BLANKET OVER COMPACTED SOIL WITH A ROW OF STAPLES/STAKES SPACED APPROXIMATELY 12" APART ACROSS THE WIDTH OF THE BLANKET.
3. ROLL THE BLANKETS (A.) DOWN OR (B.) HORIZONTALLY ACROSS THE SLOPE. BLANKETS SHALL UNROLL WITH APPROPRIATE SIDE AGAINST THE SOIL SURFACE. ALL BLANKETS MUST BE SECURELY FASTENED TO SOIL SURFACE BY PLACING STAPLES/STAKES IN APPROPRIATE LOCATIONS AS PER MANUFACTURES RECOMMENDATION.
4. THE EDGES OF PARALLEL BLANKETS MUST BE STAPLED WITH APPROXIMATELY 4"-6" OVERLAP DEPENDING ON BLANKET TYPE. TO ENSURE PROPER SEAM ALIGNMENT, PLACE THE EDGE OF THE OVERLAPPING BLANKET (BLANKET BEING INSTALLED ON TOP) EVEN WITH THE SEAM STITCH ON THE PREVIOUSLY INSTALLED BLANKET.
5. CONSECUTIVE BLANKETS SPLICED DOWN THE SLOPE MUST BE PLACED END OVER END (SHINGLE STYLE) WITH AN APPROXIMATE 3"OVERLAP. STAPLE THROUGH OVERLAPPED AREA, APPROXIMATELY 12"APART ACROSS ENTIRE BLANKET WIDTH.
6. PLACE INTERNAL STAPLES/STAKES PER MANUFACTURE RECOMMENDATION FOR THE APPROPRIATE SLOPE BEING APPLIED.
7. IN LOOSE SOIL CONDITIONS, THE USE OF STAPLE OR STAKE LENGTHS GREATER THAN 6" MAY BE NECESSARY TO PROPERLY SECURE THE BLANKETS.
8. FOLLOW EROSION CONTROL TECHNOLOGY COUNCIL SPECIFICATION FOR PRODUCT SELECTION

EROSION CONTROL BLANKET
(SLOPE INSTALLATION)
N.T.S.
BLS


Combs & ASSOCIATES INC
• LAND SURVEYING
• LAND PLANNING
• CIVIL ENGINEERING
109 W. Milwaukee St.
Janesville, WI 53548
www.combssurvey.com
tel: 608 752-0575
fax: 608 752-0534


| DATE | 05/07/20 |
|---|---|
| BY | JPJ |
| APPROVED | AFG |
| PROJECT NO. | 120-082 |

REVISIONS
05/27/20 CITY REVIEW JPJ

# EROSION CONTROL NOTES & DETAILS



I:\PROJECTS\2020 Projects\120-082 24hr Home Comfort Services\CAD\120-082e.pro
2:28 2:27PM

Combs & Associates Inc

• Land Surveying
• Land Planning
• Civil Engineering

# STORM WATER MANAGEMENT

# and

# EROSION CONTROL PLAN

## New Storage Buildings for 24hr Home Comfort Services

## 310 Sunnyside Drive

**Milton, Wisconsin**

**April 22, 2020**

WISCONSIN
ADAM F. GRIFFIN
#35660
PROFESSIONAL ENGINEER

109 W. Milwaukee St. • Janesville, WI 53548 • 608-752-0575 • Fax 608-752-0534
CombsSurvey.com

## PROJECT DESCRIPTION

This "infill" development project includes the construction of five new metal buildings, with bituminous lanes, and drainage improvements on a site disturbing approximately 2.3 acres of a 4.28 acre property. The site is located at 310 Sunnyside Drive in Milton, Wisconsin.

***Pre-Development:***
The property currently contains three metal buildings and associated bituminous drives and lanes throughout its western half. The most recent construction, including that of the pond, occurred in 2013. The proposed improvements will lie on the eastern half, currently being undeveloped, relatively flat mowed grass area. The site currently drains gently overland to the northwest (see site topography), to an existing pond lying in the westerly developed area. That pond discharges to public storm sewer in Sunnyside Drive. On-site soils, as depicted in the Rock County Soil Survey, are Plano silt loam, gravelly substratum, 0 to 2 percent slopes (PmA).

***Post-Development:***
This project includes construction of five new mini-warehouse buildings, totaling 36,800 sf (each ranging from 2,400 sf to 9,200 sf) along with associated paved lanes. Some pavement demolition and gravel removal for new paving is proposed. Additionally, storm water management improvements consisting of a vegetated swale and a bio-filter will be constructed. The swale and the bio-filter will be sized to handle the increase in TSS due to the construction of the buildings and pavement. The bio-filter will release via infiltration and overtopping to the existing pond in larger events (see drainage plan).

Site plan documents and supporting information for are included with this submittal package.

The developed site will include a total of 36,800 sf of roof, 39,750 sf of gross paved parking areas (while removing 7,000 sf bituminous and 3,300 sf gravel in those areas), and a storm water management area.

### STORM WATER MANAGEMENT

The developed site will drain, via the swale – or directly to – the new bio-filter area north of the buildings and pavement. This management area includes a 450-foot long grass swale and a new bio-filter (900 sf), and makes use of the existing depression and culvert relay to the existing detention pond. The detention pond was constructed in 2013 in accordance with the plans and permits in effect at that time.

The swale will be seeded with matching native turf grass, and the bio-filter will be seeded with a wet prairie seed mix.

**Storm water performance standards**

City of Milton and WDNR require storm water management performance standards for post-construction in-fill sites, as follows for peak flow, infiltration, and total suspended solids removal.

**Methodologies**

***WinSlamm*** software is used to determine infiltration and Total Suspended Solids (TSS) removal.
Average Annual Rainfall: 28.81 inches, Madison, 1981 (March 12 to December 2)

***Peak Flow:*** Per NR 151.123 (2)(c), an infill of less than 5 acres is **exempt** from peak flow control.

***Total Suspended Solids (TSS) removal:*** Reduce TSS load by 80% based on an average annual rainfall, as compared to no runoff management controls (NR 151.122 (1) Table 1) for an infill less than 5 acres.

A 450-foot long grass swale, leading to a bio-filter with a total area of **900** sf will be constructed in the storm water management area. This swale/filter system will provide TSS removal and infiltration of storm water. The results of the modeling indicate an ***86.3%*** reduction in TSS (see attached WinSlamm 10.4.0 modeling results).

Worksheets and input/output data for the ***SLAMM*** modeling are included with this report.

***Infiltration Requirement: NR 151.124 (3)(b)(4)*** An in-fill development area less than 5 acres is **exempt** from infiltration.

# CERTIFIED SURVEY MAP OF

PART OF LOT 2 OF A CERTIFIED SURVEY MAP AS RECORDED IN VOLUME 15, PAGES 162 THRU 164, LOCATED IN THE SE.1/4 OF THE SW.1/4 OF SECTION 26, T.4N., R.13E. OF THE 4TH P.M., CITY OF MILTON, ROCK COUNTY, WISCONSIN.

CITY OF MILTON APPROVAL

Approved by the City Plan Commission this 17 day of October, 1994, and the City Council this 18 day of October, 1994.

City Clerk Doris E. Vinsey

NOTE: This survey is subject to any and all easements and agreements, recorded or unrecorded.

NOTE: Assumed EAST along the South Line of the S.W 1/4 of Section 26-4-13.

THERE ARE NO OBJECTIONS TO THIS PLAT WITH RESPECT TO SECTION 236.12(2) (B) OF THE WISCONSIN STATUTES.
CERTIFIED THIS 24th DAY OF Oct. 1994
James Lunsted SECRETARY
ROCK COUNTY PLANNING & DEVELOPMENT COMMITTEE

SCALE: 1" = 150'

0' 25' 50' 100' 200' 300'

LEGEND:

- Set Iron Pin, 3/4" x 24", 1.5 lbs./lin. ft.
- Found 3/4" Iron Pin.

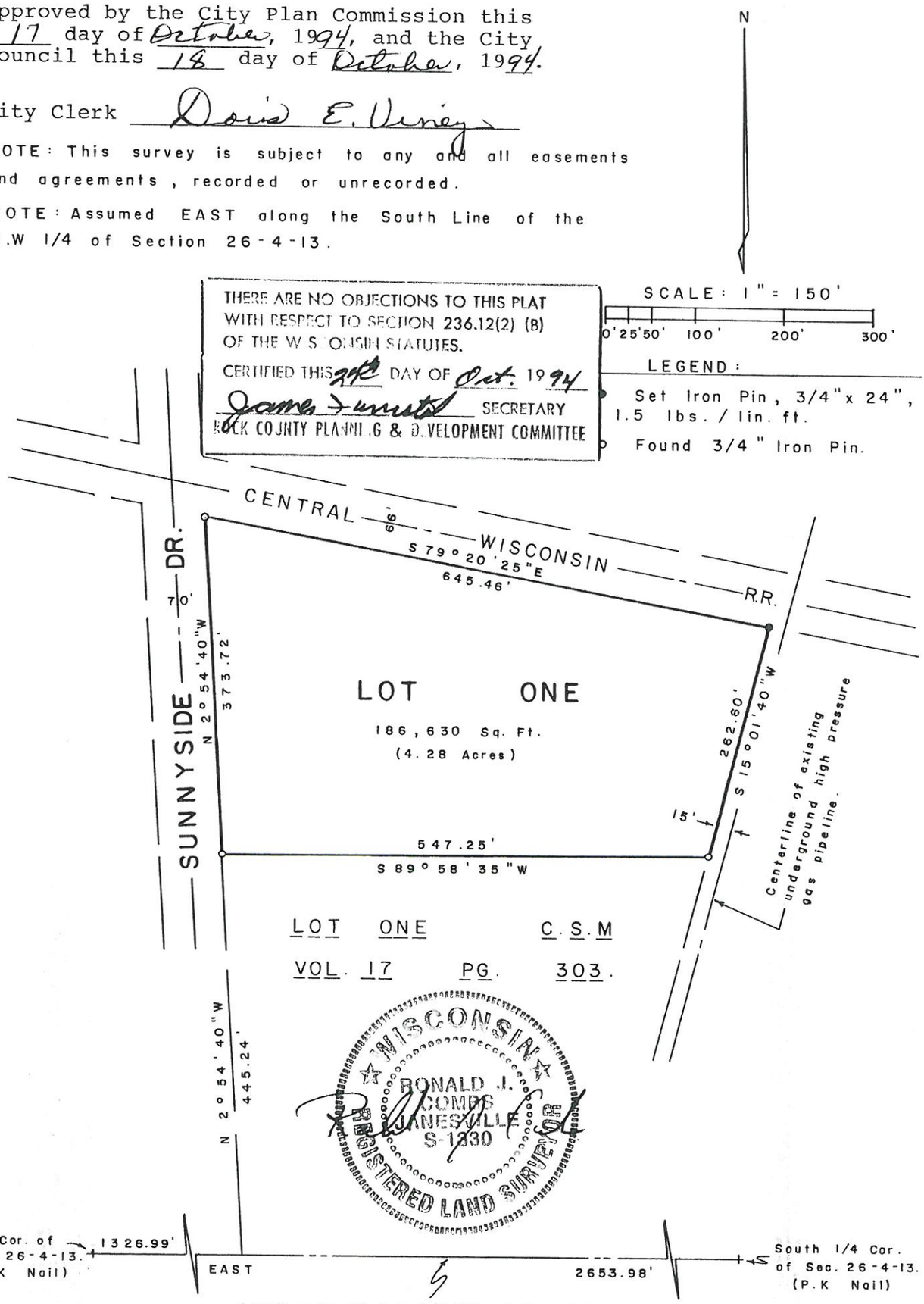


SHEET ONE OF TWO SHEETS

Order No. 94-464-for-City of Milton

# CERTIFIED SURVEY MAP

PART OF LOT 2 OF A CERTIFIED SURVEY MAP AS RECORDED IN VOLUME 15, PAGES 162 THRU 164, LOCATED IN THE SE.1/4 OF THE SW.1/4 OF SECTION 26, T.4N., R.13E. OF THE 4TH P.M., CITY OF MILTON, ROCK COUNTY, WISCONSIN.

SURVEYOR'S CERTIFICATE

State of Wisconsin
County of Rock SS. I, Ronald J. Combs, a Registered Land Surveyor, do hereby certify that I have surveyed, divided, and mapped part of Lot 2 of a Certified Survey Map as recorded in Volume 15, Pages 162 thru 164, located in the SE.1/4 of the SW.1/4 of Section 26, T.4N., R.13E. of the 4th P.M., City of Milton, Rock County, Wisconsin, DESCRIBED AS FOLLOWS: Commencing at a PK Nail at the SW Corner of said Section 26; thence East (assumed) along the South Line of the SW.1/4 of said Section, 1326.99 feet; thence N.2°54'40"W. 445.24 feet to the NW Corner of Lot One of a Certified Survey Map as recorded in Volume 17, Pages 303 and 304, also being at the place of beginning for the land to be herein described; thence continuing N.2°-54'40"W. 373.72 feet to the NW Corner of said Lot 2 (Volume 15, Pages 162 thru 164); thence S.79°20'25"E. 645.46 feet; thence S.15°01'40"W. 262.60 feet to the NE Corner of said Lot One; thence S.89°58'35"W. 547.25 feet to the place of beginning. Containing 4.28 acres. That such map is a correct representation of all of the exterior boundaries of the land surveyed and the division of that land. That I have made such survey, division and map by the direction of City of Milton and that I have fully complied with the provisions of Chapter 236.34 of the Wisconsin Statutes in surveying, dividing and mapping the same.

Given under my hand and seal this 11th day of October, 1994 at Janesville, Wisconsin.

CORPORATE OWNER'S CERTIFICATE

As owners, the City of Milton, a Municipal Corporation duly organized and existing under and by virtue of the laws of the State of Wisconsin caused the land described on this map to be surveyed, mapped, divided and dedicated as represented hereon. IN WITNESS WHEREOF, the said City of Milton has caused these presents to be signed by Richard Dalson, its Mayor and countersigned by David E. Viney, its City Clerk, at Milton, Wisconsin.

Richard Dalson
Mayor

David E. Viney
City Clerk

State of Wisconsin
County of Rock SS. Personally came before me this 17th day of October, 1994, Richard Dalson, Mayor and Doris E. Viney, City Clerk of the above named corporation, to me known to be the persons who executed the foregoing instrument and to me known to be such officers of said corporation, and acknowledged that they executed the foregoing instrument as such officers as deed of said corporation, by its authority.

Notary Public, Rock County, Wisconsin Vicki L. Heritage
My Commission expires: 1-28-1996

RECORDING DATA
No. 1248153 received for Record
this 27 day of October, 1994,
at 9:40 o'clock A.M., and recorded
in Volume 17, Pages 464 & 465
_____ of Certified Survey Maps
of Rock County, Wisconsin.
Card 742 Image 793 & 794
Register Donna L. Berkley

WISCONSIN RONALD J. COMBS JANESVILLE S-1330 REGISTERED LAND SURVEYOR

SHEET TWO OF TWO SHEETS

Order No. 94-464-for-City of Milton

12.00

465

# EXISTING SITE IMAGES

310 Sunnyside Drive, Milton WI 53563

Looking West from proposed building site

Looking West from proposed building site

# EXISTING SITE IMAGES

310 Sunnyside Drive, Milton WI 53563

Looking East from existing 310 Sunnyside Drive site

Looking North from Southerly property line

# 24hr Home Comfort Services

## Legend

- NRCS Wetspots
- Maximum Extent Wetland Indicators
- Index to EN_Image_Basemap_Leaf_Off

## Notes

Indicative Soils

0.1 0 0.03 0.1 Miles

NAD_1983_HARN_Wisconsin_TM

1: 1,980

DISCLAIMER: The information shown on these maps has been obtained from various sources, and are of varying age, reliability and resolution. These maps are not intended to be used for navigation, nor are these maps an authoritative source of information about legal land ownership or public access. No warranty, expressed or implied, is made regarding accuracy, applicability for a particular use, completeness, or legality of the information depicted on this map. For more information, see the DNR Legal Notices web page: http://dnr.wi.gov/legal/

Data file name:  T:\PROJECTS\2020 Projects\120-082 24hr Home Comfort Services\Engineering\Winslamm\2020-04-22_24hr Home Comfort Svc_actual site.mdb
WinSLAMM Version 10.4.0
Rain file name:  C:\WinSLAMM Files\Rain Files\WisReg - Madison WI 1981.RAN
Particulate Solids Concentration file name:  C:\WinSLAMM Files\v10.1 WI_AVG01.pscx
Runoff Coefficient file name:  C:\WinSLAMM Files\WI_SL06 Dec06.rsvx
Residential Street Delivery file name:  C:\WinSLAMM Files\WI_Com Inst Indust Dec06.std
Institutional Street Delivery file name:  C:\WinSLAMM Files\WI_Com Inst Indust Dec06.std
Commercial Street Delivery file name:  C:\WinSLAMM Files\WI_Com Inst Indust Dec06.std
Industrial Street Delivery file name:  C:\WinSLAMM Files\WI_Com Inst Indust Dec06.std
Other Urban Street Delivery file name:  C:\WinSLAMM Files\WI_Com Inst Indust Dec06.std
Freeway Street Delivery file name:  C:\WinSLAMM Files\WI_Com Inst Indust Dec06.std
Apply Street Delivery Files to Adjust the After Event Load Street Dirt Mass Balance:  False
Pollutant Relative Concentration file name:  C:\WinSLAMM Files\WI_GEO03.ppdx
Source Area PSD and Peak to Average Flow Ratio File:  C:\WinSLAMM Files\NURP Source Area PSD Files.csv
Cost Data file name:
Seed for random number generator:  -42
Study period starting date:  01/01/81  Study period ending date:  12/31/81
Start of Winter Season:  12/02  End of Winter Season:  03/12
Date:  04-22-2020  Time:  13:26:51
Site information:
Simmons redevelopment

| Pre-Development Area Description | Pre-Development Area (ac) | Pre-Development CN |
|---|---|---|
| Exi Bldg | .073 | 98 |
| exi pvmt | .071 | 98 |
| exi gravel | 1.075 | 98 |
| Total Area (ac)/Composite CN | 1.219 | 98 |

LU# 1 - Commercial:  Commercial Storage (actual)  Total area (ac):  1.757
1 - Roofs 1:  0.845 ac.  Pitched  Connected  Source Area PSD File: C:\WinSLAMM Files\NURP.cpz
13 - Paved Parking 1:  0.912 ac.  Connected  Source Area PSD File: C:\WinSLAMM Files\NURP.cpz

Control Practice 1:  Grass Swale CP# 1 (DS) - Grass Swale
Total drainage area (acres)= 1.757
Fraction of drainage area served by swales (ac) = 1.00
Swale density (ft/ac) = 216.66
Total swale length (ft) = 450
Average swale length to outlet (ft)= 75
Typical bottom width (ft) = 3.0
Typical swale side slope (_H:1V) = 3.0
Typical longitudinal slope (ft.H/ft.V) = 0.007
Swale retardance factor:  C
Typical grass height (in) = 6.0
Swale dynamic infiltration rate (in/hr)= 0.500
Typical swale depth (ft) for cost analysis (optional) = 0.0
Particle size distribution file name: Not needed - calculated by program
Use total swale length instead of swale density for infiltration calculations:  True

Control Practice 2:  Biofilter CP# 1 (DS) - DS Biofilters # 5

2020-04-22_24hr Home Comfort Svc_actual site - InputData.txt

1. Top area (square feet) = 3000
2. Bottom aea (square feet) = 900
3. Depth (ft): 3.5
4. Biofilter width (ft) - for Cost Purposes Only: 30
5. Infiltration rate (in/hr) = 3.6
6. Random infiltration rate generation? No
7. Infiltration rate fraction (side): 0.01
8. Infiltration rate fraction (bottom): 1
9. Depth of biofilter that is rock filled (ft) 0
10. Porosity of rock filled volume = 0
11. Engineered soil infiltration rate: 3.6
12. Engineered soil depth (ft) = 2
13. Engineered soil porosity = 0.33
14. Percent solids reduction due to flow through engineered soil = 0
15. Biofilter peak to average flow ratio = 3.8
16. Number of biofiltration control devices = 1
17. Particle size distribution file: Not needed - calculated by program
18. Initial water surface elevation (ft): 0

Soil Data Soil Type Fraction in Eng. Soil

Biofilter Outlet/Discharge Characteristics:

Outlet type: Broad Crested Weir

1. Weir crest length (ft): 15
2. Weir crest width (ft): 3
3. Height of datum to bottom of weir opening: 3.2

SLAMM for Windows Version 10.4.0
(c) Copyright Robert Pitt and John Voorhees 2012
All Rights Reserved

Data file name: T:\PROJECTS\2020 Projects\120-082 24hr Home Comfort Services\Engineering\Winslamm\2020-04-22_24hr Home Comfort Svc_actual site.mdb
Data file description: Simmons redevelopment
Rain file name: C:\WinSLAMM Files\Rain Files\WisReg - Madison WI 1981.RAN
Particulate Solids Concentration file name: C:\WinSLAMM Files\v10.1 WI_AVG01.pscx
Runoff Coefficient file name: C:\WinSLAMM Files\WI_SL06 Dec06.rsvx
Residential Street Delivery file name: C:\WinSLAMM Files\WI_Com Inst Indust Dec06.std
Institutional Street Delivery file name: C:\WinSLAMM Files\WI_Com Inst Indust Dec06.std
Commercial Street Delivery file name: C:\WinSLAMM Files\WI_Com Inst Indust Dec06.std
Industrial Street Delivery file name: C:\WinSLAMM Files\WI_Com Inst Indust Dec06.std
Other Urban Street Delivery file name: C:\WinSLAMM Files\WI_Com Inst Indust Dec06.std
Freeway Street Delivery file name: C:\WinSLAMM Files\WI_Com Inst Indust Dec06.std
Pollutant Relative Concentration file name: C:\WinSLAMM Files\WI_GEO03.ppdx
Start of Winter Season: 12/02 End of Winter Season: 03/12
Model Run Start Date: 01/01/81 Model Run End Date: 12/31/81
Date of run: 04-22-2020 Time of run: 13:22:29
Total Area Modeled (acres): 1.757
Years in Model Run: 1.00

| | Runoff Volume (cu ft) | Percent Runoff Volume Reduction | Particulate Solids Conc. (mg/L) | Particulate Solids Yield (lbs) | Percent Particulate Solids Reduction |
|---|---|---|---|---|---|
| Total of all Land Uses without Controls: | 150223 | - | 77.70 | 728.7 | - |
| Outfall Total with Controls: | 21901 | 85.42% | 73.16 | 100.0 | 86.28% |
| Annualized Total After Outfall Controls: | 21961 | | | 100.3 | |

United States Department of Agriculture

Natural Resources Conservation Service

A product of the National Cooperative Soil Survey, a joint effort of the United States Department of Agriculture and other Federal agencies, State agencies including the Agricultural Experiment Stations, and local participants

# Custom Soil Resource Report for Rock County, Wisconsin

## 24hr Home Comfort Services

April 2, 2020

# Preface

Soil surveys contain information that affects land use planning in survey areas. They highlight soil limitations that affect various land uses and provide information about the properties of the soils in the survey areas. Soil surveys are designed for many different users, including farmers, ranchers, foresters, agronomists, urban planners, community officials, engineers, developers, builders, and home buyers. Also, conservationists, teachers, students, and specialists in recreation, waste disposal, and pollution control can use the surveys to help them understand, protect, or enhance the environment.

Various land use regulations of Federal, State, and local governments may impose special restrictions on land use or land treatment. Soil surveys identify soil properties that are used in making various land use or land treatment decisions. The information is intended to help the land users identify and reduce the effects of soil limitations on various land uses. The landowner or user is responsible for identifying and complying with existing laws and regulations.

Although soil survey information can be used for general farm, local, and wider area planning, onsite investigation is needed to supplement this information in some cases. Examples include soil quality assessments (http://www.nrcs.usda.gov/wps/portal/nrcs/main/soils/health/) and certain conservation and engineering applications. For more detailed information, contact your local USDA Service Center (https://offices.sc.egov.usda.gov/locator/app?agency=nrcs) or your NRCS State Soil Scientist (http://www.nrcs.usda.gov/wps/portal/nrcs/detail/soils/contactus/?cid=nrcs142p2_053951).

Great differences in soil properties can occur within short distances. Some soils are seasonally wet or subject to flooding. Some are too unstable to be used as a foundation for buildings or roads. Clayey or wet soils are poorly suited to use as septic tank absorption fields. A high water table makes a soil poorly suited to basements or underground installations.

The National Cooperative Soil Survey is a joint effort of the United States Department of Agriculture and other Federal agencies, State agencies including the Agricultural Experiment Stations, and local agencies. The Natural Resources Conservation Service (NRCS) has leadership for the Federal part of the National Cooperative Soil Survey.

Information about soils is updated periodically. Updated information is available through the NRCS Web Soil Survey, the site for official soil survey information.

The U.S. Department of Agriculture (USDA) prohibits discrimination in all its programs and activities on the basis of race, color, national origin, age, disability, and where applicable, sex, marital status, familial status, parental status, religion, sexual orientation, genetic information, political beliefs, reprisal, or because all or a part of an individual's income is derived from any public assistance program. (Not all prohibited bases apply to all programs.) Persons with disabilities who require

alternative means for communication of program information (Braille, large print, audiotape, etc.) should contact USDA's TARGET Center at (202) 720-2600 (voice and TDD). To file a complaint of discrimination, write to USDA, Director, Office of Civil Rights, 1400 Independence Avenue, S.W., Washington, D.C. 20250-9410 or call (800) 795-3272 (voice) or (202) 720-6382 (TDD). USDA is an equal opportunity provider and employer.

# Contents

**Preface**..... 2
**How Soil Surveys Are Made**.....5
**Soil Map**..... 8
Soil Map.....9
Legend.....10
Map Unit Legend..... 11
Map Unit Descriptions.....11
Rock County, Wisconsin..... 13
PmA—Plano silt loam, gravelly substratum, 0 to 2 percent slopes..... 13
**References**.....15

# How Soil Surveys Are Made

Soil surveys are made to provide information about the soils and miscellaneous areas in a specific area. They include a description of the soils and miscellaneous areas and their location on the landscape and tables that show soil properties and limitations affecting various uses. Soil scientists observed the steepness, length, and shape of the slopes; the general pattern of drainage; the kinds of crops and native plants; and the kinds of bedrock. They observed and described many soil profiles. A soil profile is the sequence of natural layers, or horizons, in a soil. The profile extends from the surface down into the unconsolidated material in which the soil formed or from the surface down to bedrock. The unconsolidated material is devoid of roots and other living organisms and has not been changed by other biological activity.

Currently, soils are mapped according to the boundaries of major land resource areas (MLRAs). MLRAs are geographically associated land resource units that share common characteristics related to physiography, geology, climate, water resources, soils, biological resources, and land uses (USDA, 2006). Soil survey areas typically consist of parts of one or more MLRA.

The soils and miscellaneous areas in a survey area occur in an orderly pattern that is related to the geology, landforms, relief, climate, and natural vegetation of the area. Each kind of soil and miscellaneous area is associated with a particular kind of landform or with a segment of the landform. By observing the soils and miscellaneous areas in the survey area and relating their position to specific segments of the landform, a soil scientist develops a concept, or model, of how they were formed. Thus, during mapping, this model enables the soil scientist to predict with a considerable degree of accuracy the kind of soil or miscellaneous area at a specific location on the landscape.

Commonly, individual soils on the landscape merge into one another as their characteristics gradually change. To construct an accurate soil map, however, soil scientists must determine the boundaries between the soils. They can observe only a limited number of soil profiles. Nevertheless, these observations, supplemented by an understanding of the soil-vegetation-landscape relationship, are sufficient to verify predictions of the kinds of soil in an area and to determine the boundaries.

Soil scientists recorded the characteristics of the soil profiles that they studied. They noted soil color, texture, size and shape of soil aggregates, kind and amount of rock fragments, distribution of plant roots, reaction, and other features that enable them to identify soils. After describing the soils in the survey area and determining their properties, the soil scientists assigned the soils to taxonomic classes (units). Taxonomic classes are concepts. Each taxonomic class has a set of soil characteristics with precisely defined limits. The classes are used as a basis for comparison to classify soils systematically. Soil taxonomy, the system of taxonomic classification used in the United States, is based mainly on the kind and character of soil properties and the arrangement of horizons within the profile. After the soil

scientists classified and named the soils in the survey area, they compared the individual soils with similar soils in the same taxonomic class in other areas so that they could confirm data and assemble additional data based on experience and research.

The objective of soil mapping is not to delineate pure map unit components; the objective is to separate the landscape into landforms or landform segments that have similar use and management requirements. Each map unit is defined by a unique combination of soil components and/or miscellaneous areas in predictable proportions. Some components may be highly contrasting to the other components of the map unit. The presence of minor components in a map unit in no way diminishes the usefulness or accuracy of the data. The delineation of such landforms and landform segments on the map provides sufficient information for the development of resource plans. If intensive use of small areas is planned, onsite investigation is needed to define and locate the soils and miscellaneous areas.

Soil scientists make many field observations in the process of producing a soil map. The frequency of observation is dependent upon several factors, including scale of mapping, intensity of mapping, design of map units, complexity of the landscape, and experience of the soil scientist. Observations are made to test and refine the soil-landscape model and predictions and to verify the classification of the soils at specific locations. Once the soil-landscape model is refined, a significantly smaller number of measurements of individual soil properties are made and recorded. These measurements may include field measurements, such as those for color, depth to bedrock, and texture, and laboratory measurements, such as those for content of sand, silt, clay, salt, and other components. Properties of each soil typically vary from one point to another across the landscape.

Observations for map unit components are aggregated to develop ranges of characteristics for the components. The aggregated values are presented. Direct measurements do not exist for every property presented for every map unit component. Values for some properties are estimated from combinations of other properties.

While a soil survey is in progress, samples of some of the soils in the area generally are collected for laboratory analyses and for engineering tests. Soil scientists interpret the data from these analyses and tests as well as the field-observed characteristics and the soil properties to determine the expected behavior of the soils under different uses. Interpretations for all of the soils are field tested through observation of the soils in different uses and under different levels of management. Some interpretations are modified to fit local conditions, and some new interpretations are developed to meet local needs. Data are assembled from other sources, such as research information, production records, and field experience of specialists. For example, data on crop yields under defined levels of management are assembled from farm records and from field or plot experiments on the same kinds of soil.

Predictions about soil behavior are based not only on soil properties but also on such variables as climate and biological activity. Soil conditions are predictable over long periods of time, but they are not predictable from year to year. For example, soil scientists can predict with a fairly high degree of accuracy that a given soil will have a high water table within certain depths in most years, but they cannot predict that a high water table will always be at a specific level in the soil on a specific date.

After soil scientists located and identified the significant natural bodies of soil in the survey area, they drew the boundaries of these bodies on aerial photographs and

identified each as a specific map unit. Aerial photographs show trees, buildings, fields, roads, and rivers, all of which help in locating boundaries accurately.

# Soil Map

The soil map section includes the soil map for the defined area of interest, a list of soil map units on the map and extent of each map unit, and cartographic symbols displayed on the map. Also presented are various metadata about data used to produce the map, and a description of each soil map unit.

# Custom Soil Resource Report
## Soil Map

Map Scale: 1:779 if printed on A landscape (11" x 8.5") sheet.

N

Meters: 0 10 20 40 60

Feet: 0 35 70 140 210

Map projection: Web Mercator Corner coordinates: WGS84 Edge tics: UTM Zone 16N WGS84

## MAP LEGEND

**Area of Interest (AOI)**

Area of Interest (AOI)

**Soils**

Soil Map Unit Polygons

Soil Map Unit Lines

Soil Map Unit Points

**Special Point Features**

Blowout

Borrow Pit

Clay Spot

Closed Depression

Gravel Pit

Gravelly Spot

Landfill

Lava Flow

Marsh or swamp

Mine or Quarry

Miscellaneous Water

Perennial Water

Rock Outcrop

Saline Spot

Sandy Spot

Severely Eroded Spot

Sinkhole

Slide or Slip

Sodic Spot

Spoil Area

Stony Spot

Very Stony Spot

Wet Spot

Other

Special Line Features

**Water Features**

Streams and Canals

**Transportation**

Rails

Interstate Highways

US Routes

Major Roads

Local Roads

**Background**

Aerial Photography

## MAP INFOR

The soil surveys that comprise your
1:20,000.

Warning: Soil Map may not be valid

Enlargement of maps beyond the sc
misunderstanding of the detail of ma
line placement. The maps do not sho
contrasting soils that could have bee
scale.

Please rely on the bar scale on each
measurements.

Source of Map: Natural Resources
Web Soil Survey URL:
Coordinate System: Web Mercator

Maps from the Web Soil Survey are
projection, which preserves direction
distance and area. A projection that
Albers equal-area conic projection, s
accurate calculations of distance or

This product is generated from the U
of the version date(s) listed below.

Soil Survey Area: Rock County, Wi
Survey Area Data: Version 17, Sep

Soil map units are labeled (as space
1:50,000 or larger.

Date(s) aerial images were photogra
2015

The orthophoto or other base map o
compiled and digitized probably diffe
imagery displayed on these maps. A
shifting of map unit boundaries may

# Map Unit Legend

| Map Unit Symbol | Map Unit Name | Acres in AOI | Percent of AOI |
|---|---|---|---|
| PmA | Plano silt loam, gravelly substratum, 0 to 2 percent slopes | 2.3 | 100.0% |
| **Totals for Area of Interest** | | **2.3** | **100.0%** |

# Map Unit Descriptions

The map units delineated on the detailed soil maps in a soil survey represent the soils or miscellaneous areas in the survey area. The map unit descriptions, along with the maps, can be used to determine the composition and properties of a unit.

A map unit delineation on a soil map represents an area dominated by one or more major kinds of soil or miscellaneous areas. A map unit is identified and named according to the taxonomic classification of the dominant soils. Within a taxonomic class there are precisely defined limits for the properties of the soils. On the landscape, however, the soils are natural phenomena, and they have the characteristic variability of all natural phenomena. Thus, the range of some observed properties may extend beyond the limits defined for a taxonomic class. Areas of soils of a single taxonomic class rarely, if ever, can be mapped without including areas of other taxonomic classes. Consequently, every map unit is made up of the soils or miscellaneous areas for which it is named and some minor components that belong to taxonomic classes other than those of the major soils.

Most minor soils have properties similar to those of the dominant soil or soils in the map unit, and thus they do not affect use and management. These are called noncontrasting, or similar, components. They may or may not be mentioned in a particular map unit description. Other minor components, however, have properties and behavioral characteristics divergent enough to affect use or to require different management. These are called contrasting, or dissimilar, components. They generally are in small areas and could not be mapped separately because of the scale used. Some small areas of strongly contrasting soils or miscellaneous areas are identified by a special symbol on the maps. If included in the database for a given area, the contrasting minor components are identified in the map unit descriptions along with some characteristics of each. A few areas of minor components may not have been observed, and consequently they are not mentioned in the descriptions, especially where the pattern was so complex that it was impractical to make enough observations to identify all the soils and miscellaneous areas on the landscape.

The presence of minor components in a map unit in no way diminishes the usefulness or accuracy of the data. The objective of mapping is not to delineate pure taxonomic classes but rather to separate the landscape into landforms or landform segments that have similar use and management requirements. The delineation of such segments on the map provides sufficient information for the development of resource plans. If intensive use of small areas is planned, however,

onsite investigation is needed to define and locate the soils and miscellaneous areas.

An identifying symbol precedes the map unit name in the map unit descriptions. Each description includes general facts about the unit and gives important soil properties and qualities.

Soils that have profiles that are almost alike make up a *soil series*. Except for differences in texture of the surface layer, all the soils of a series have major horizons that are similar in composition, thickness, and arrangement.

Soils of one series can differ in texture of the surface layer, slope, stoniness, salinity, degree of erosion, and other characteristics that affect their use. On the basis of such differences, a soil series is divided into *soil phases*. Most of the areas shown on the detailed soil maps are phases of soil series. The name of a soil phase commonly indicates a feature that affects use or management. For example, Alpha silt loam, 0 to 2 percent slopes, is a phase of the Alpha series.

Some map units are made up of two or more major soils or miscellaneous areas. These map units are complexes, associations, or undifferentiated groups.

A *complex* consists of two or more soils or miscellaneous areas in such an intricate pattern or in such small areas that they cannot be shown separately on the maps. The pattern and proportion of the soils or miscellaneous areas are somewhat similar in all areas. Alpha-Beta complex, 0 to 6 percent slopes, is an example.

An *association* is made up of two or more geographically associated soils or miscellaneous areas that are shown as one unit on the maps. Because of present or anticipated uses of the map units in the survey area, it was not considered practical or necessary to map the soils or miscellaneous areas separately. The pattern and relative proportion of the soils or miscellaneous areas are somewhat similar. Alpha-Beta association, 0 to 2 percent slopes, is an example.

An *undifferentiated group* is made up of two or more soils or miscellaneous areas that could be mapped individually but are mapped as one unit because similar interpretations can be made for use and management. The pattern and proportion of the soils or miscellaneous areas in a mapped area are not uniform. An area can be made up of only one of the major soils or miscellaneous areas, or it can be made up of all of them. Alpha and Beta soils, 0 to 2 percent slopes, is an example.

Some surveys include *miscellaneous areas*. Such areas have little or no soil material and support little or no vegetation. Rock outcrop is an example.

# Rock County, Wisconsin

## PmA—Plano silt loam, gravelly substratum, 0 to 2 percent slopes

### Map Unit Setting

*National map unit symbol:* 2tjwy
*Elevation:* 660 to 1,080 feet
*Mean annual precipitation:* 33 to 37 inches
*Mean annual air temperature:* 45 to 48 degrees F
*Frost-free period:* 110 to 185 days
*Farmland classification:* All areas are prime farmland

### Map Unit Composition

*Plano, gravelly substratum, and similar soils:* 85 percent
*Minor components:* 15 percent
*Estimates are based on observations, descriptions, and transects of the mapunit.*

### Description of Plano, Gravelly Substratum

#### Setting

*Landform:* Outwash plains
*Landform position (three-dimensional):* Tread
*Down-slope shape:* Linear
*Across-slope shape:* Linear
*Parent material:* Loess over loamy outwash over sandy and gravelly outwash

#### Typical profile

*Ap - 0 to 16 inches:* silt loam
*Bt1 - 16 to 46 inches:* silty clay loam
*2Bt2 - 46 to 57 inches:* loam
*2C - 57 to 79 inches:* stratified gravelly sand

#### Properties and qualities

*Slope:* 0 to 2 percent
*Depth to restrictive feature:* More than 80 inches
*Natural drainage class:* Well drained
*Capacity of the most limiting layer to transmit water (Ksat):* Moderately high to high (0.60 to 2.00 in/hr)
*Depth to water table:* More than 80 inches
*Frequency of flooding:* None
*Frequency of ponding:* None
*Calcium carbonate, maximum in profile:* 10 percent
*Salinity, maximum in profile:* Nonsaline to very slightly saline (0.0 to 2.0 mmhos/cm)
*Available water storage in profile:* High (about 11.6 inches)

#### Interpretive groups

*Land capability classification (irrigated):* None specified
*Land capability classification (nonirrigated):* 1
*Hydrologic Soil Group:* B
*Forage suitability group:* High AWC, adequately drained (G095BY008WI)
*Hydric soil rating:* No

**Minor Components**

**Elburn, gravelly substratum**

*Percent of map unit:* 10 percent
*Landform:* Outwash plains
*Landform position (three-dimensional):* Rise
*Down-slope shape:* Linear
*Across-slope shape:* Linear
*Hydric soil rating:* No

**Warsaw**

*Percent of map unit:* 5 percent
*Landform:* Outwash plains
*Landform position (three-dimensional):* Rise
*Down-slope shape:* Linear
*Across-slope shape:* Linear
*Hydric soil rating:* No

# References


American Association of State Highway and Transportation Officials (AASHTO). 2004. Standard specifications for transportation materials and methods of sampling and testing. 24th edition.

American Society for Testing and Materials (ASTM). 2005. Standard classification of soils for engineering purposes. ASTM Standard D2487-00.

Cowardin, L.M., V. Carter, F.C. Golet, and E.T. LaRoe. 1979. Classification of wetlands and deep-water habitats of the United States. U.S. Fish and Wildlife Service FWS/OBS-79/31.

Federal Register. July 13, 1994. Changes in hydric soils of the United States.

Federal Register. September 18, 2002. Hydric soils of the United States.

Hurt, G.W., and L.M. Vasilas, editors. Version 6.0, 2006. Field indicators of hydric soils in the United States.

National Research Council. 1995. Wetlands: Characteristics and boundaries.

Soil Survey Division Staff. 1993. Soil survey manual. Soil Conservation Service. U.S. Department of Agriculture Handbook 18. http://www.nrcs.usda.gov/wps/portal/nrcs/detail/national/soils/?cid=nrcs142p2_054262

Soil Survey Staff. 1999. Soil taxonomy: A basic system of soil classification for making and interpreting soil surveys. 2nd edition. Natural Resources Conservation Service, U.S. Department of Agriculture Handbook 436. http://www.nrcs.usda.gov/wps/portal/nrcs/detail/national/soils/?cid=nrcs142p2_053577

Soil Survey Staff. 2010. Keys to soil taxonomy. 11th edition. U.S. Department of Agriculture, Natural Resources Conservation Service. http://www.nrcs.usda.gov/wps/portal/nrcs/detail/national/soils/?cid=nrcs142p2_053580

Tiner, R.W., Jr. 1985. Wetlands of Delaware. U.S. Fish and Wildlife Service and Delaware Department of Natural Resources and Environmental Control, Wetlands Section.

United States Army Corps of Engineers, Environmental Laboratory. 1987. Corps of Engineers wetlands delineation manual. Waterways Experiment Station Technical Report Y-87-1.

United States Department of Agriculture, Natural Resources Conservation Service. National forestry manual. http://www.nrcs.usda.gov/wps/portal/nrcs/detail/soils/home/?cid=nrcs142p2_053374

United States Department of Agriculture, Natural Resources Conservation Service. National range and pasture handbook. http://www.nrcs.usda.gov/wps/portal/nrcs/detail/national/landuse/rangepasture/?cid=stelprdb1043084

United States Department of Agriculture, Natural Resources Conservation Service. National soil survey handbook, title 430-VI. http://www.nrcs.usda.gov/wps/portal/nrcs/detail/soils/scientists/?cid=nrcs142p2_054242

United States Department of Agriculture, Natural Resources Conservation Service. 2006. Land resource regions and major land resource areas of the United States, the Caribbean, and the Pacific Basin. U.S. Department of Agriculture Handbook 296. http://www.nrcs.usda.gov/wps/portal/nrcs/detail/national/soils/?cid=nrcs142p2_053624

United States Department of Agriculture, Soil Conservation Service. 1961. Land capability classification. U.S. Department of Agriculture Handbook 210. http://www.nrcs.usda.gov/Internet/FSE_DOCUMENTS/nrcs142p2_052290.pdf